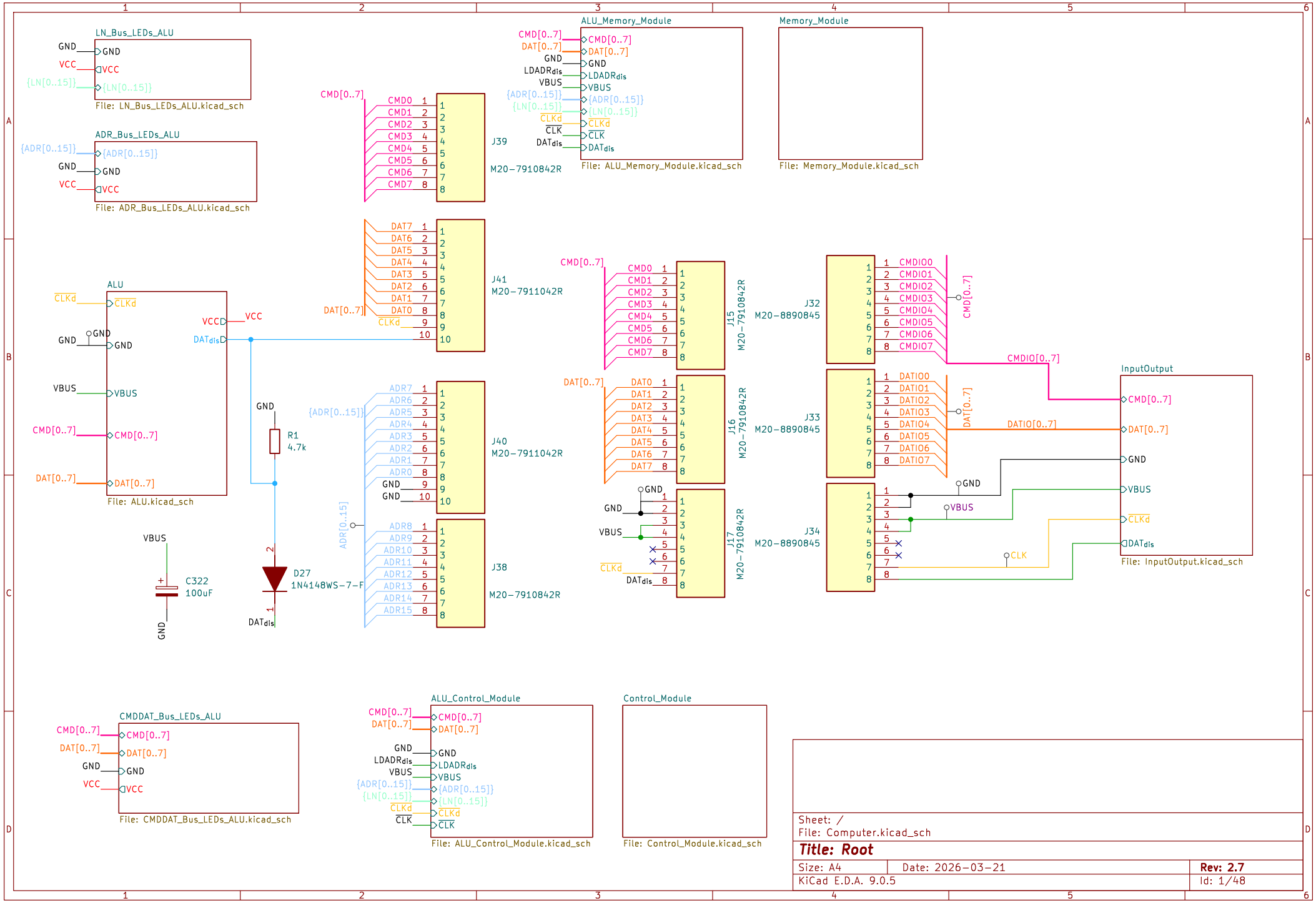
LN_Bus_LEDs_ALU
File: LN_Bus_LEDs_ALU.kicad_sch
ADR_Bus_LEDs_ALU
File: ADR_Bus_LEDs_ALU.kicad_sch
ALU_Memory_Module
File: ALU_Memory_Module.kicad_sch
Memory_Module
File: Memory_Module.kicad_sch
J39
M20-7910842R
J41
M20-7911042R
J40
M20-7911042R
J38
M20-7910842R
ALU
File: ALU.kicad_sch
R1
4.7k
D27
1N4148WS-7-F
C322
100uF
J15
M20-7910842R
J16
M20-7910842R
J17
M20-7910842R
J32
M20-8890845
J33
M20-8890845
J34
M20-8890845
InputOutput
File: InputOutput.kicad_sch
CMDDAT_Bus_LEDs_ALU
File: CMDDAT_Bus_LEDs_ALU.kicad_sch
ALU_Control_Module
File: ALU_Control_Module.kicad_sch
Control_Module
File: Control_Module.kicad_sch
Sheet: /
File: Computer.kicad_sch
Title: Root
Size: A4
Date: 2026-03-21
Rev: 2.7
KiCad E.D.A. 9.0.5
Id: 1/48

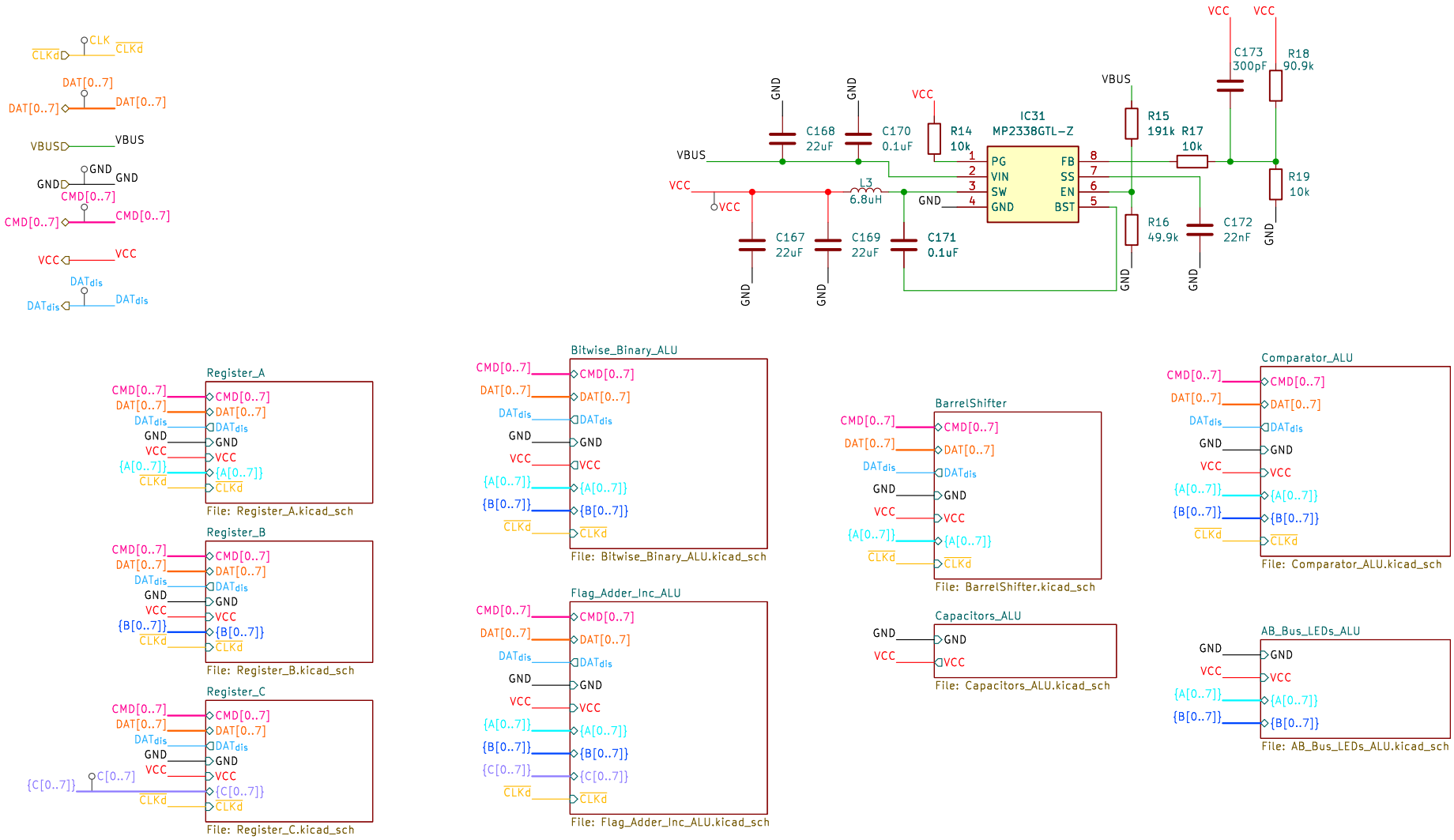

Sheet: /ALU/
File: ALU.kicad_sch

Title: ALU

Size: A4	Date: 2026-03-21	**Rev: 2.7**
KiCad E.D.A. 9.0.5		Id: 2/48

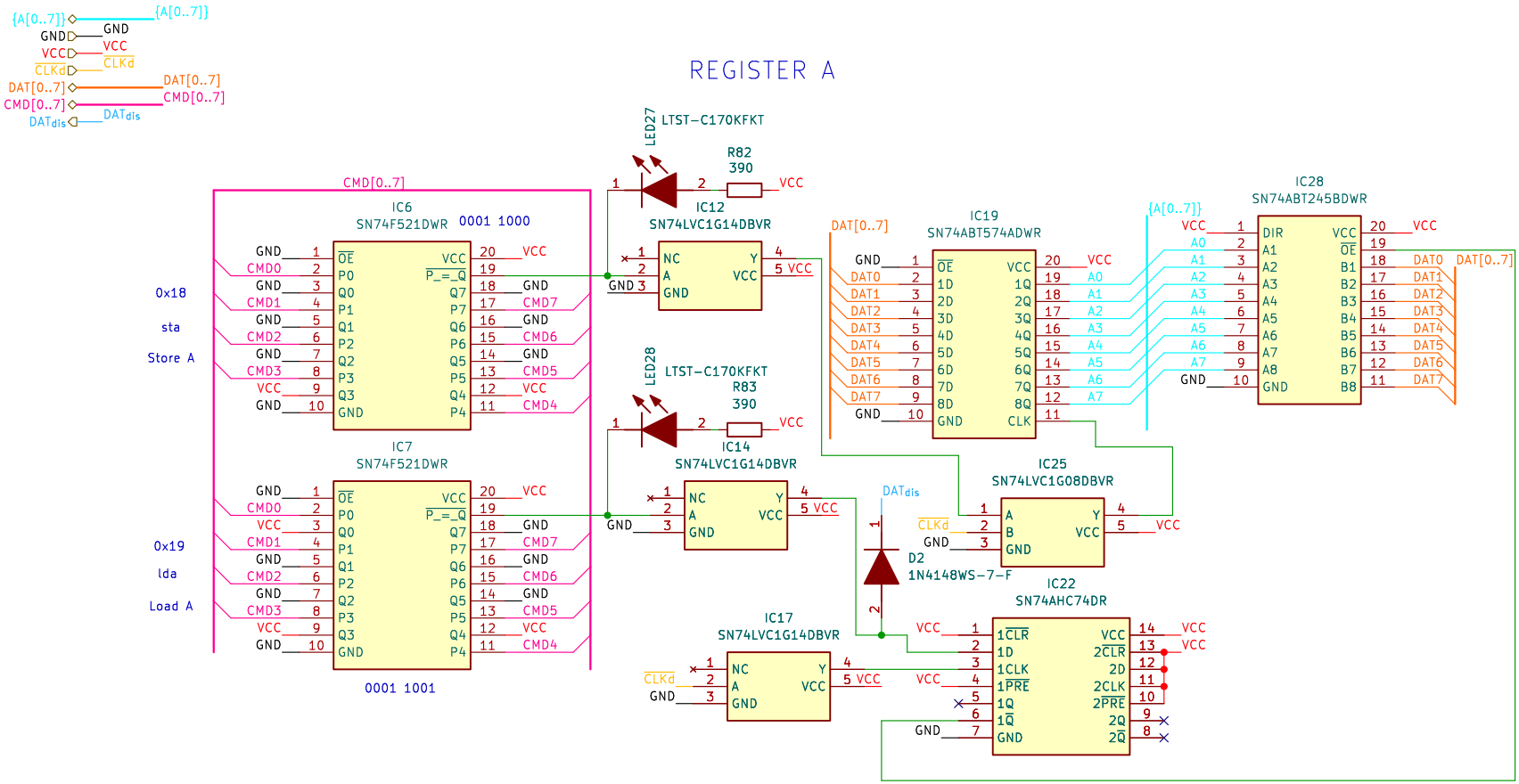

Sheet: /ALU/Register_A/
File: Register_A.kicad_sch

Title: Register_A

Size: A4	Date: 2026-03-21	Rev: 2.7
KiCad E.D.A. 9.0.5		Id: 3/48

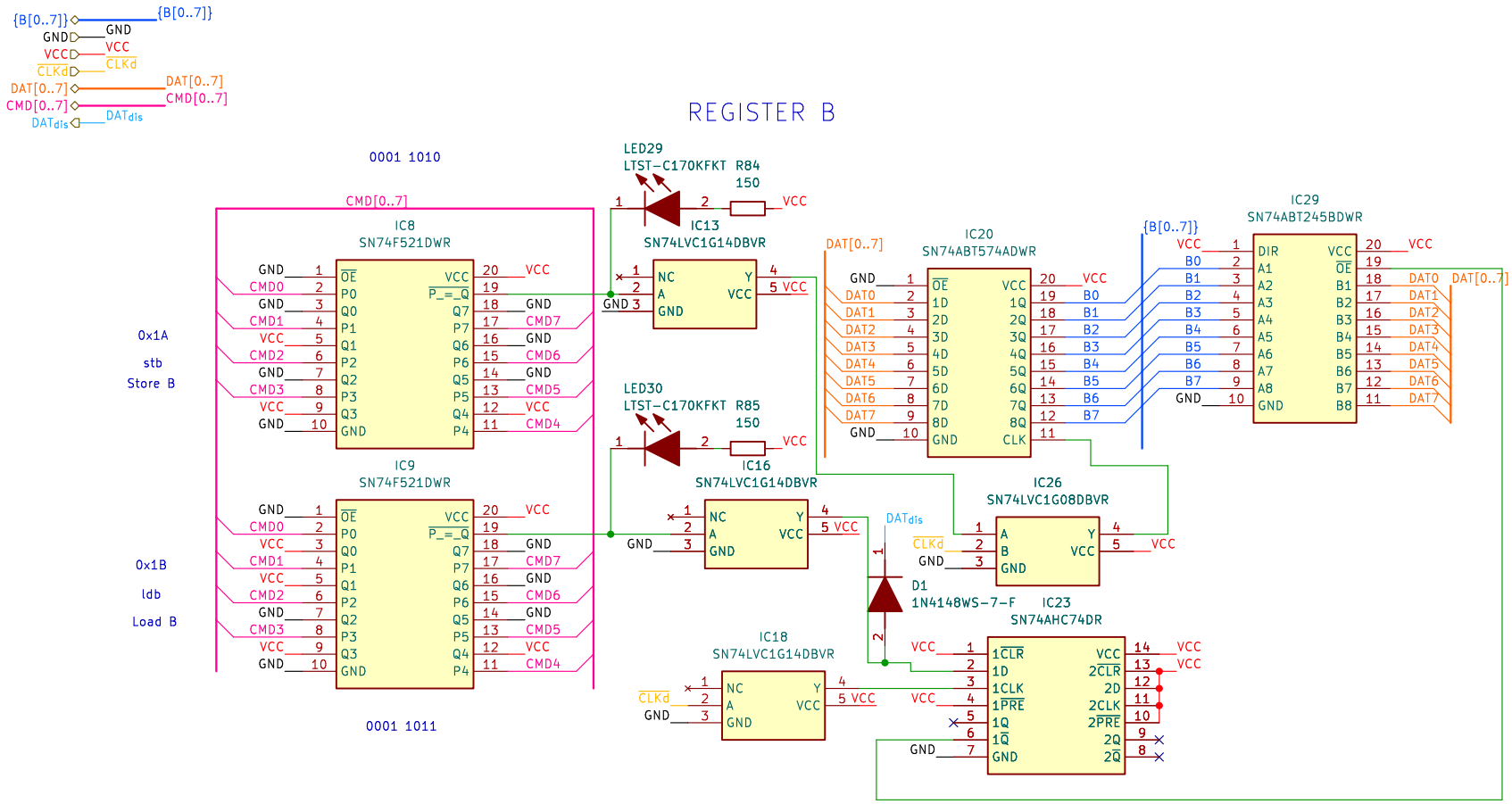

Sheet: /ALU/Register_B/
File: Register_B.kicad_sch

Title: Register_B

Size: A4	Date: 2026-03-21	Rev: 2.7
KiCad E.D.A. 9.0.5		Id: 4/48

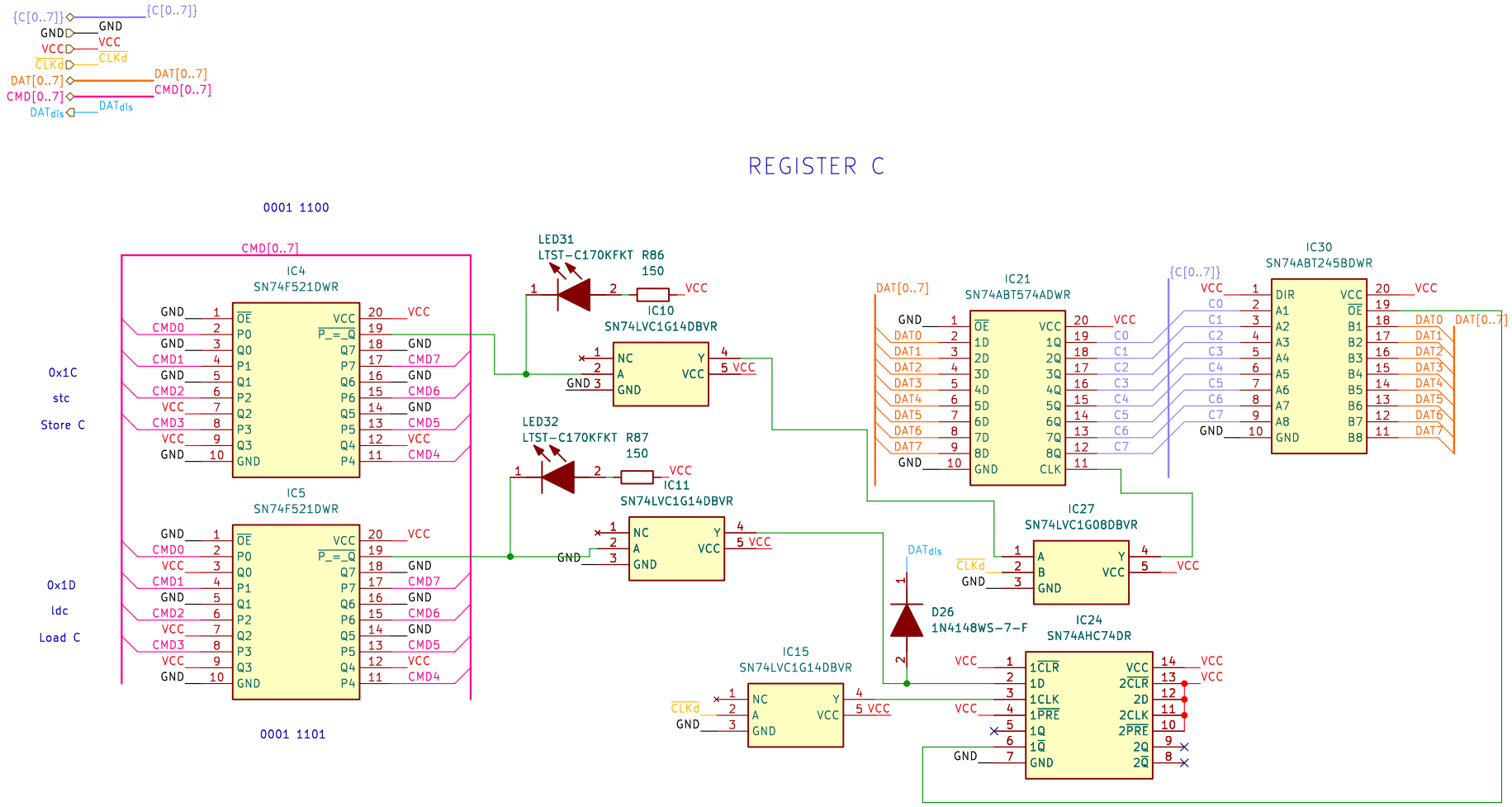

Sheet: /ALU/Register_C/
File: Register_C.kicad_sch

Title: Register_C

Size: A4	Date: 2026-03-21	**Rev: 2.7**
KiCad E.D.A. 9.0.5		Id: 5/48

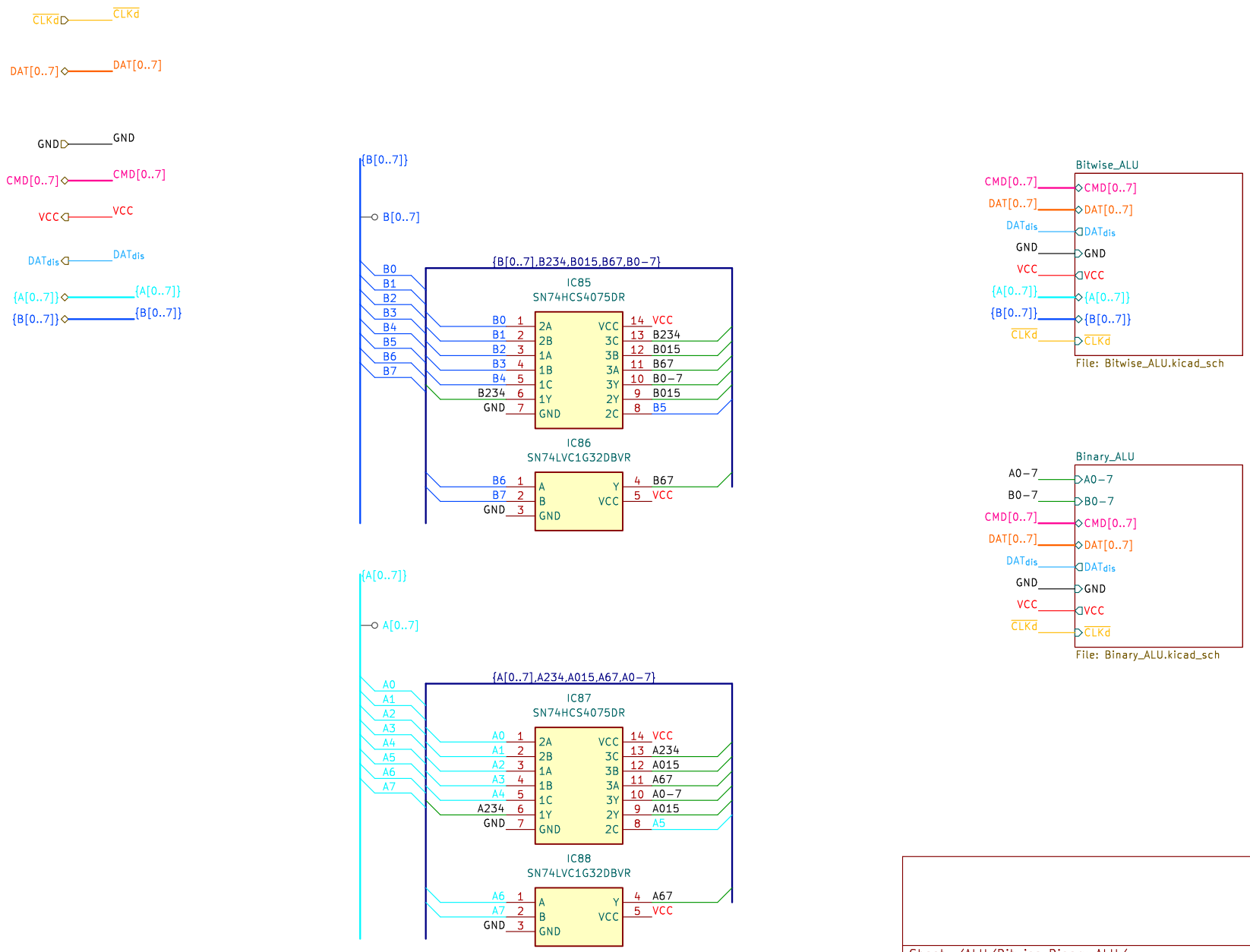

Sheet: /ALU/Bitwise_Binary_ALU/
File: Bitwise_Binary_ALU.kicad_sch

Title: Bitwise_Binary_ALU

Size: A4	Date: 2026-03-21	Rev: 2.7
KiCad E.D.A. 9.0.5		Id: 6/48

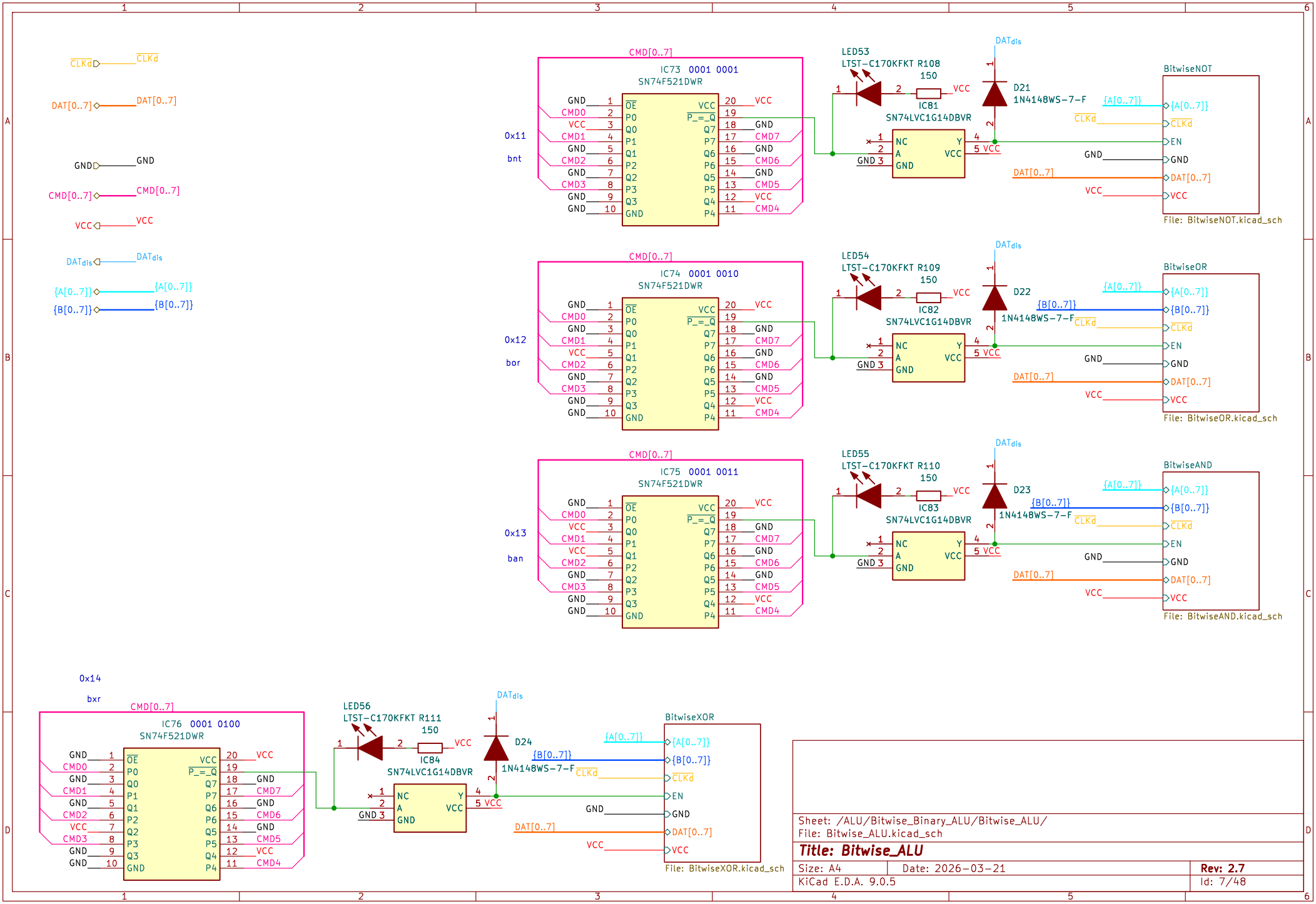

Sheet: /ALU/Bitwise_Binary_ALU/Bitwise_ALU/
File: Bitwise_ALU.kicad_sch

Title: Bitwise_ALU

Size: A4	Date: 2026-03-21	Rev: 2.7
KiCad E.D.A. 9.0.5		Id: 7/48

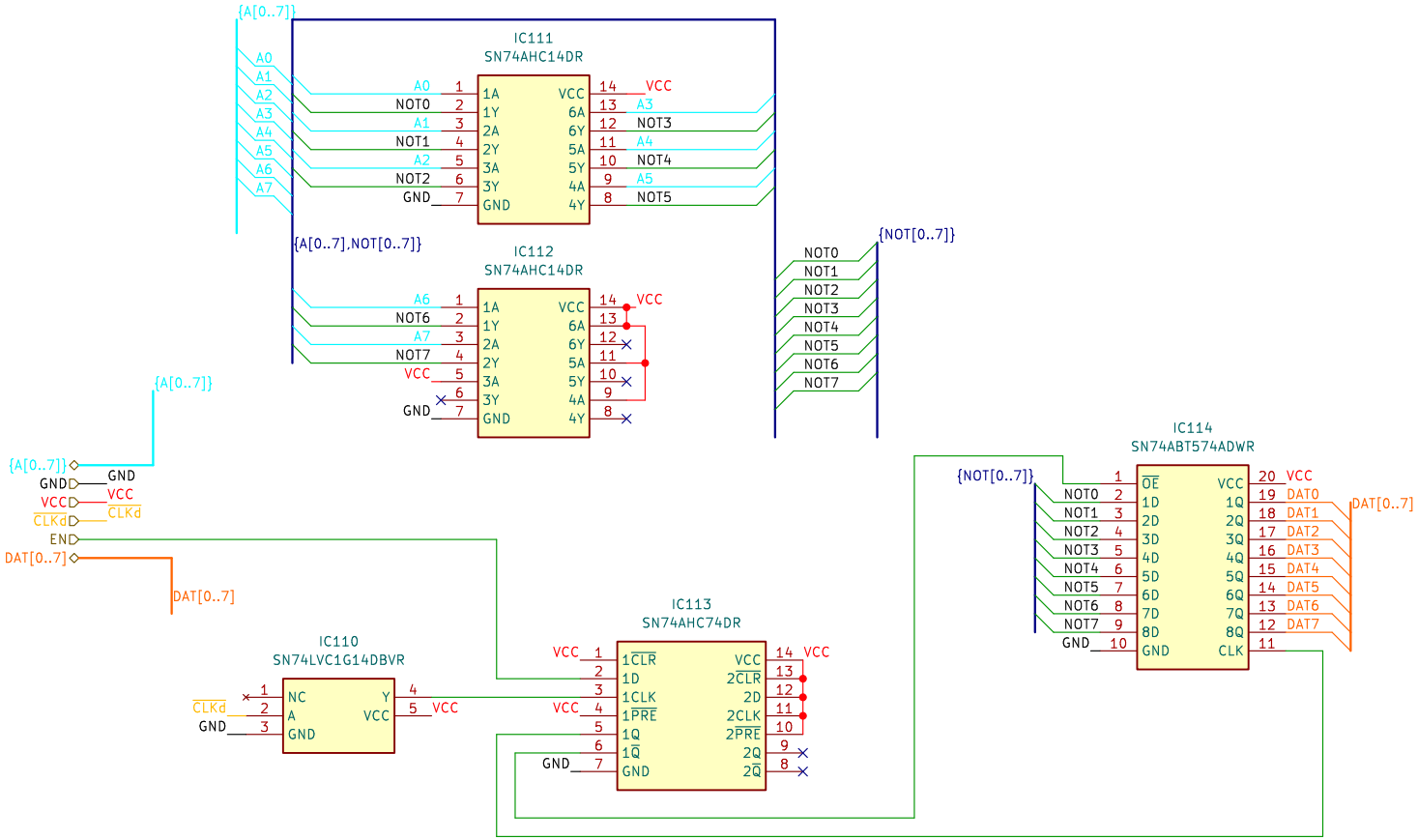

Sheet: /ALU/Bitwise_Binary_ALU/Bitwise_ALU/BitwiseNOT/
File: BitwiseNOT.kicad_sch

Title: BitwiseNOT

Size: A4	Date: 2026-03-21	**Rev: 2.7**
KiCad E.D.A. 9.0.5		Id: 8/48

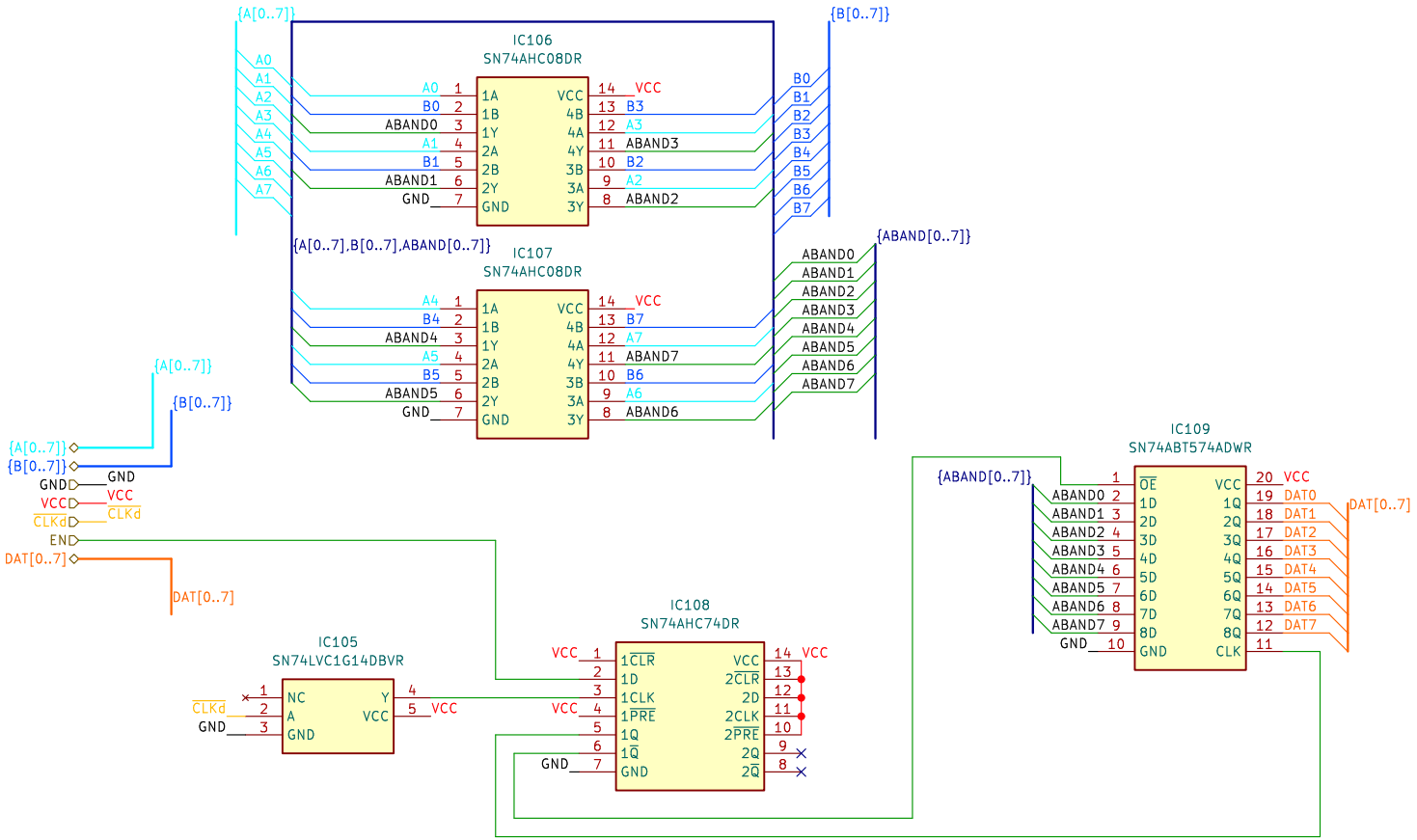

Sheet: /ALU/Bitwise_Binary_ALU/Bitwise_ALU/BitwiseAND/
File: BitwiseAND.kicad_sch

Title: BitwiseAND

Size: A4	Date: 2026-03-21	Rev: 2.7
KiCad E.D.A. 9.0.5		Id: 9/48

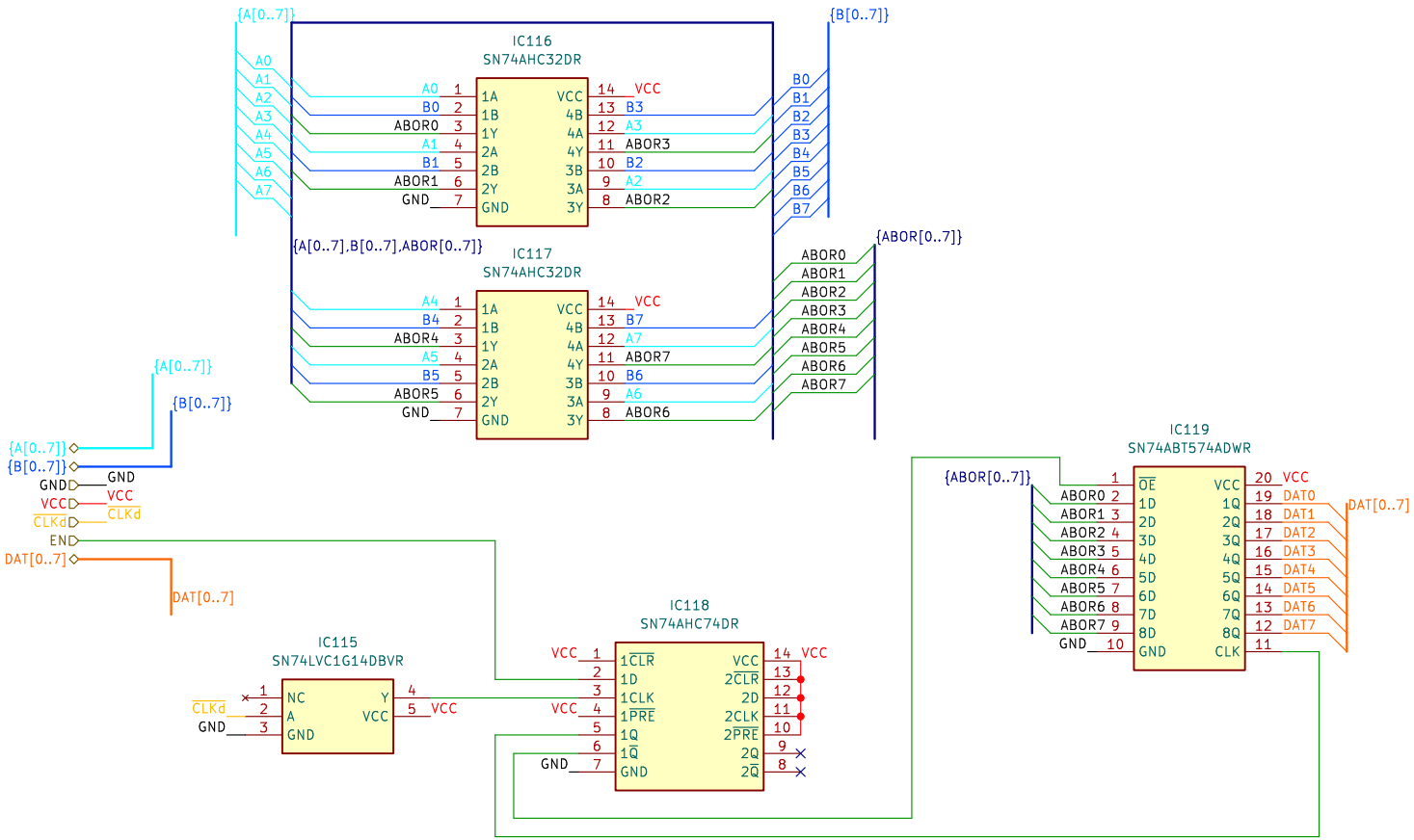

Sheet: /ALU/Bitwise_Binary_ALU/Bitwise_ALU/BitwiseOR/
File: BitwiseOR.kicad_sch

Title: BitwiseOR

Size: A4	Date: 2026-03-21	Rev: 2.7
KiCad E.D.A. 9.0.5		Id: 10/48

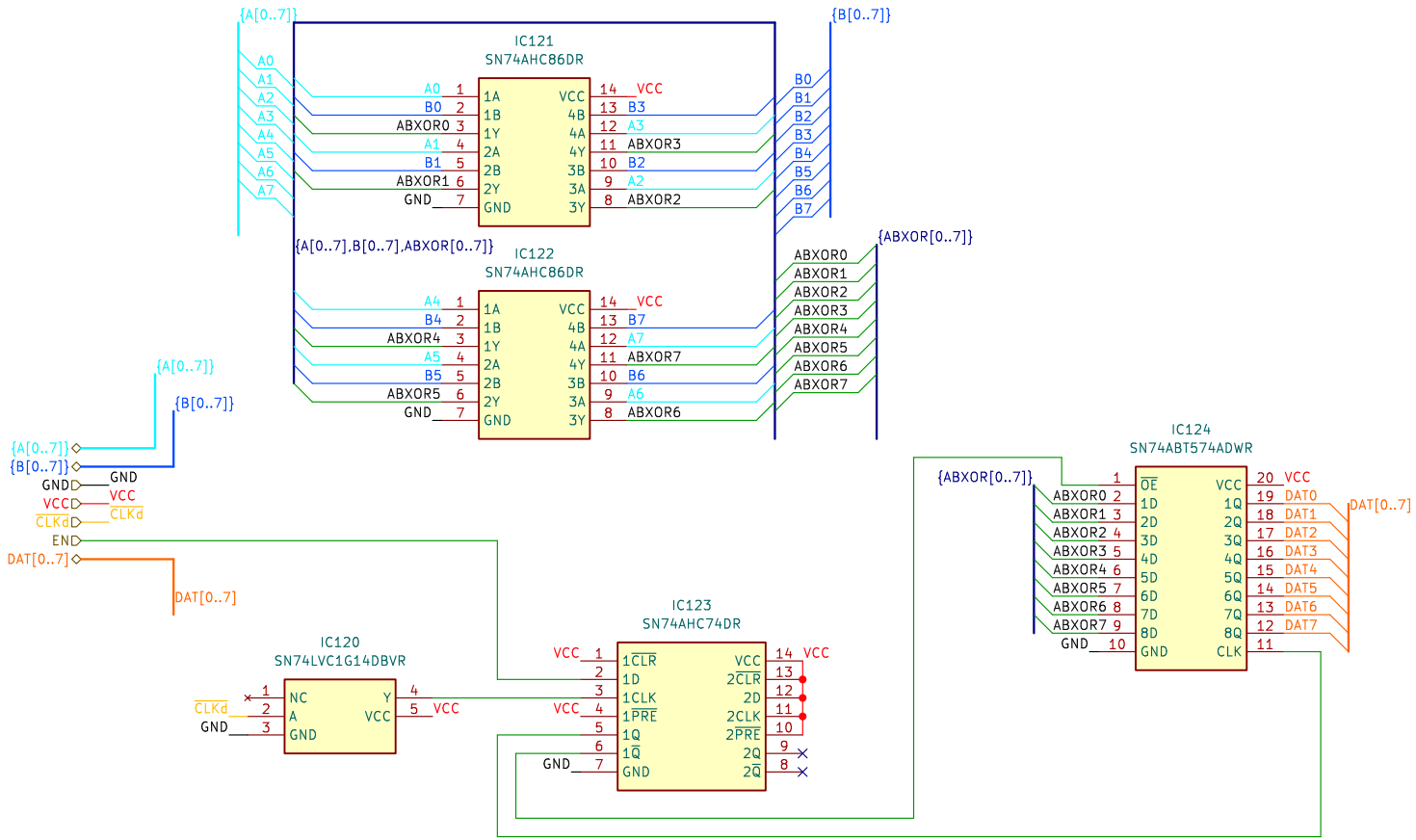

Sheet: /ALU/Bitwise_Binary_ALU/Bitwise_ALU/BitwiseXOR/
File: BitwiseXOR.kicad_sch

Title: BitwiseXOR

Size: A4	Date: 2026-03-21	Rev: 2.7
KiCad E.D.A. 9.0.5		Id: 11/48

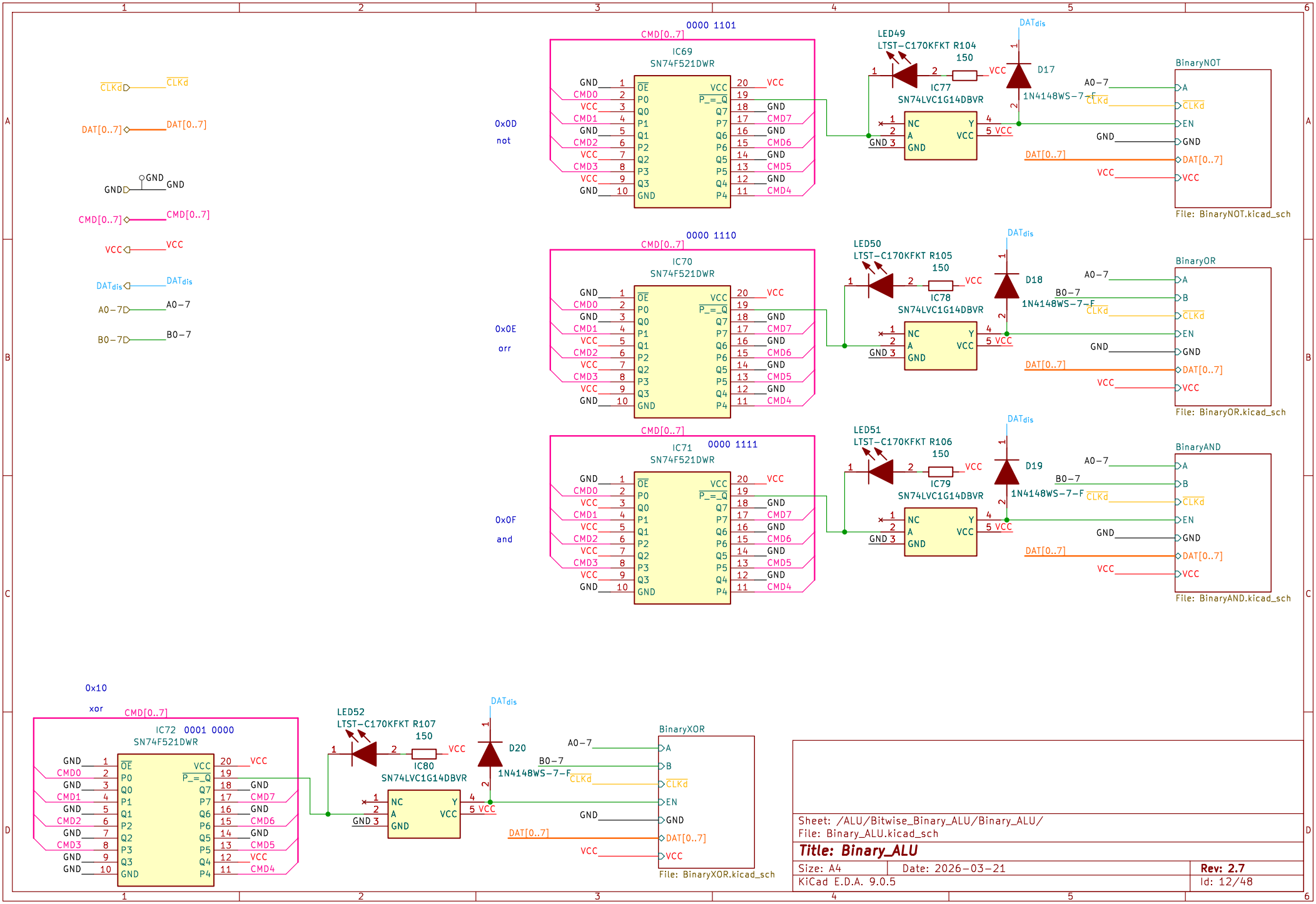

Sheet: /ALU/Bitwise_Binary_ALU/Binary_ALU/
File: Binary_ALU.kicad_sch

Title: Binary_ALU

Size: A4	Date: 2026–03–21	Rev: 2.7
KiCad E.D.A. 9.0.5		Id: 12/48

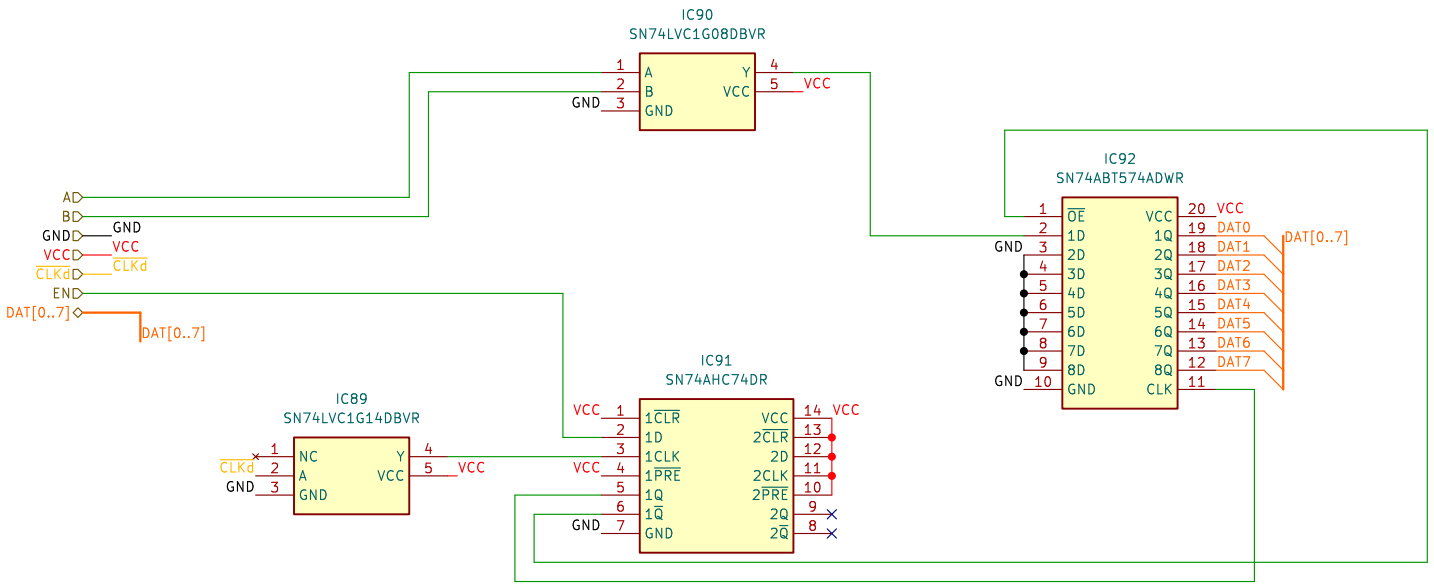

Sheet: /ALU/Bitwise_Binary_ALU/Binary_ALU/BinaryAND/
File: BinaryAND.kicad_sch

Title: BinaryAND

Size: A4	Date: 2026-03-21	Rev: 2.7
KiCad E.D.A. 9.0.5		Id: 13/48

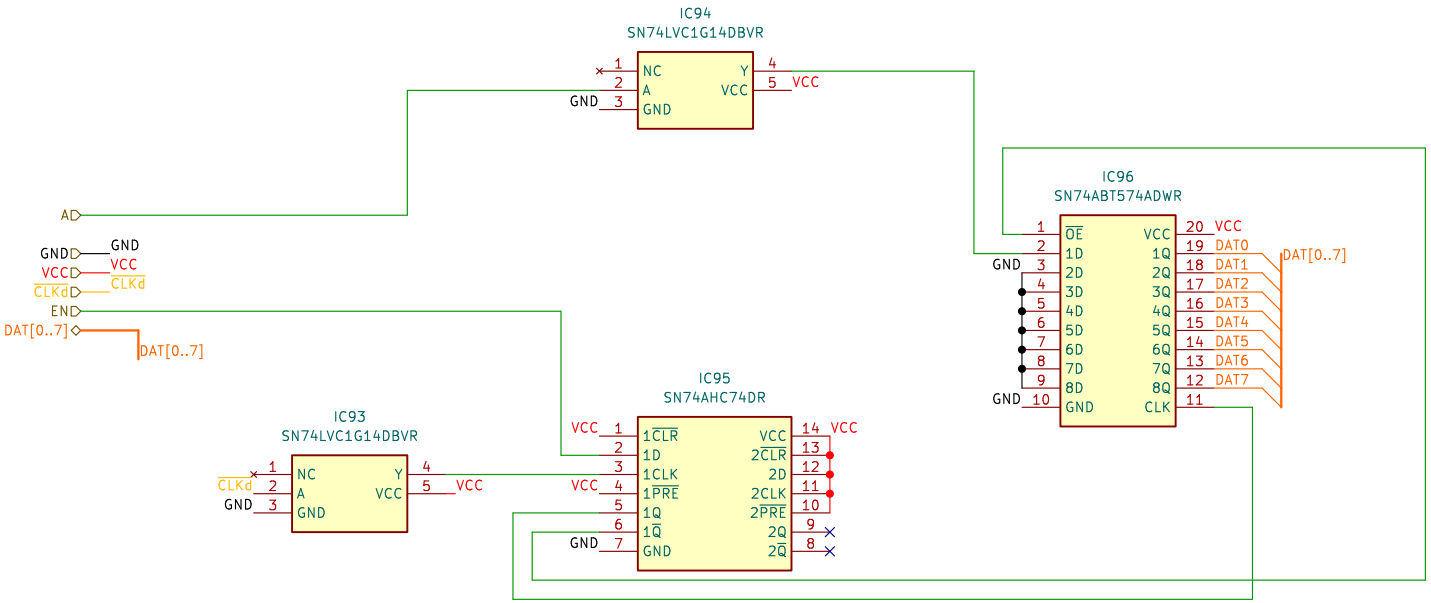

Sheet: /ALU/Bitwise_Binary_ALU/Binary_ALU/BinaryNOT/
File: BinaryNOT.kicad_sch

Title: BinaryNOT

Size: A4	Date: 2026-03-21	Rev: 2.7
KiCad E.D.A. 9.0.5		Id: 14/48

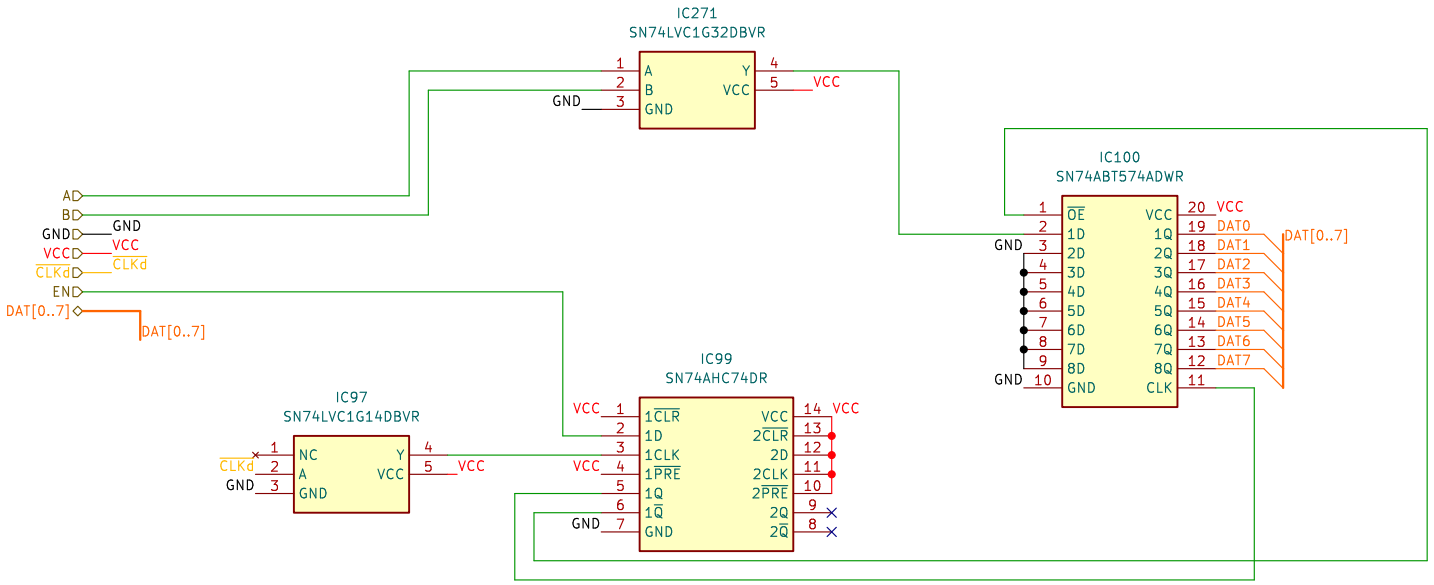

Sheet: /ALU/Bitwise_Binary_ALU/Binary_ALU/BinaryOR/
File: BinaryOR.kicad_sch

Title: BinaryOR

Size: A4	Date: 2026-03-21	Rev: 2.7
KiCad E.D.A. 9.0.5		Id: 15/48

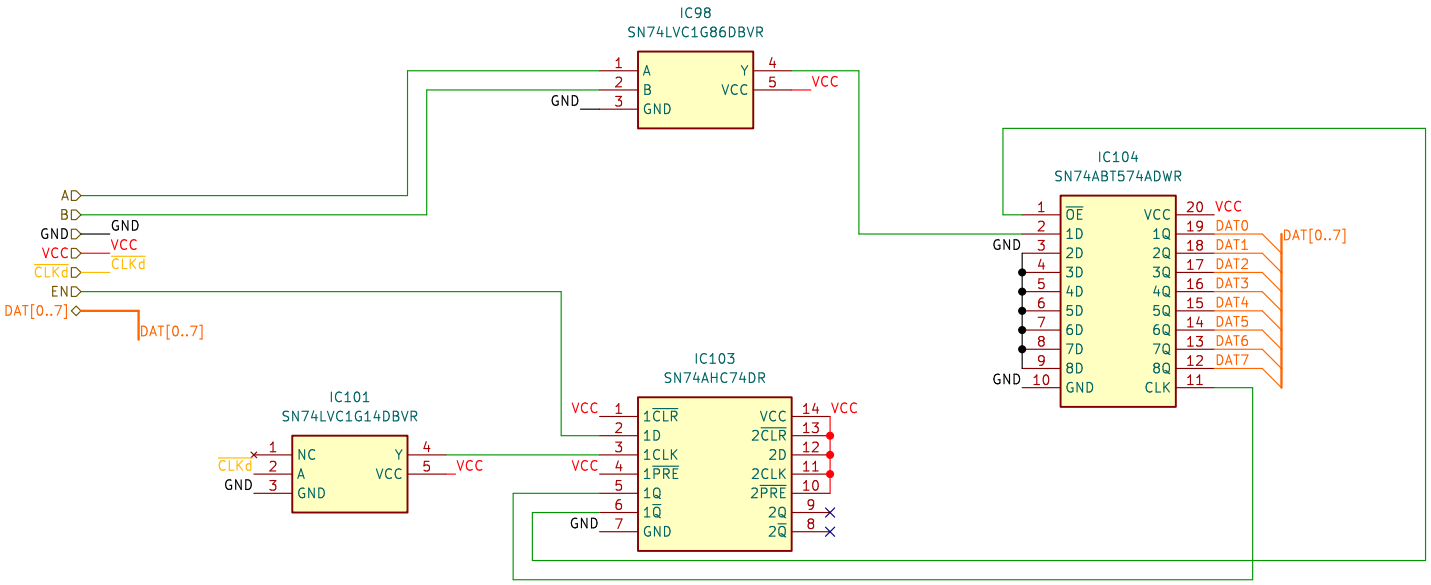

Sheet: /ALU/Bitwise_Binary_ALU/Binary_ALU/BinaryXOR/
File: BinaryXOR.kicad_sch

Title: BinaryXOR

Size: A4	Date: 2026-03-21	**Rev: 2.7**
KiCad E.D.A. 9.0.5		Id: 16/48

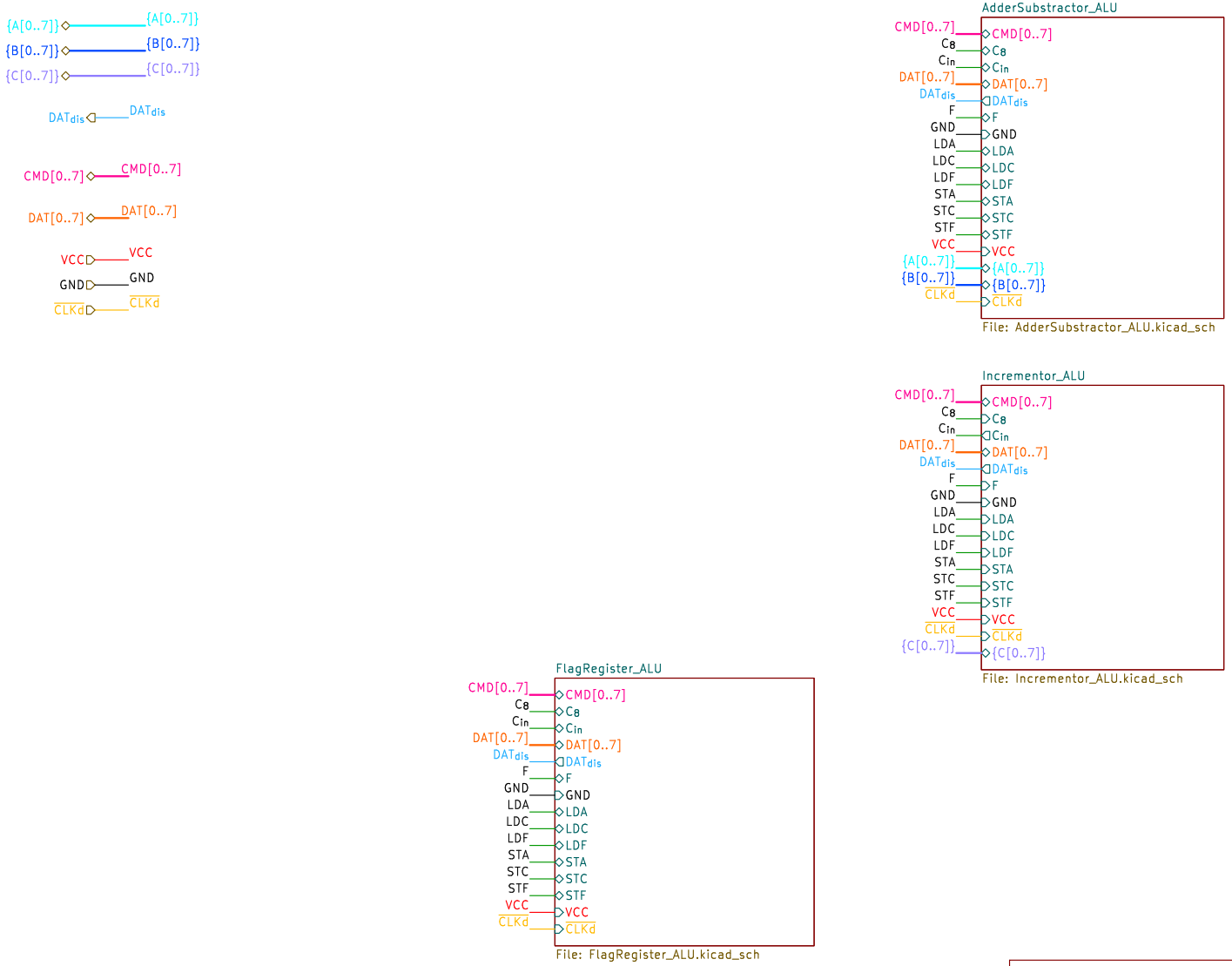

Sheet: /ALU/Flag_Adder_Inc_ALU/
File: Flag_Adder_Inc_ALU.kicad_sch

Title: Flag_Adder_Inc_ALU

Size: A4	Date: 2026-03-21	**Rev: 2.7**
KiCad E.D.A. 9.0.5		Id: 17/48

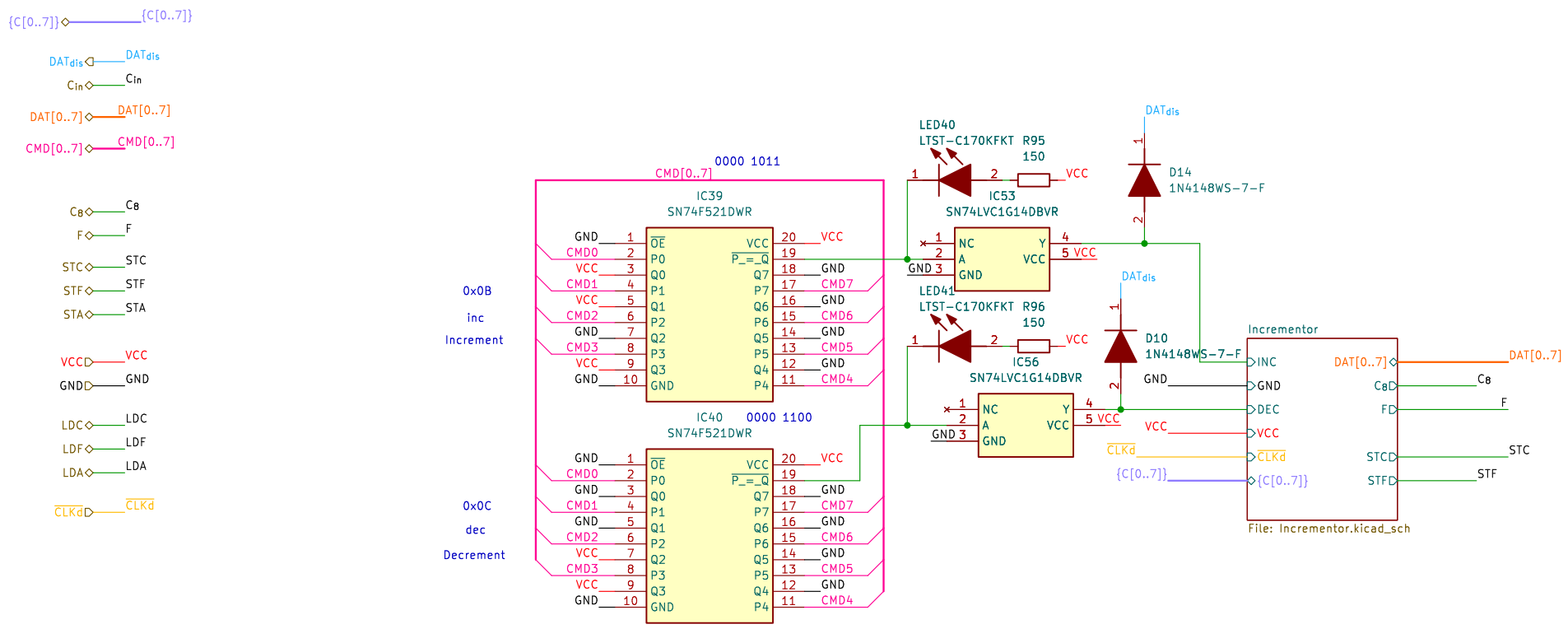

Sheet: /ALU/Flag_Adder_Inc_ALU/Incrementor_ALU/
File: Incrementor_ALU.kicad_sch

Title: Incrementor_ALU

Size: A4	Date: 2026-03-21	**Rev: 2.7**
KiCad E.D.A. 9.0.5		Id: 18/48

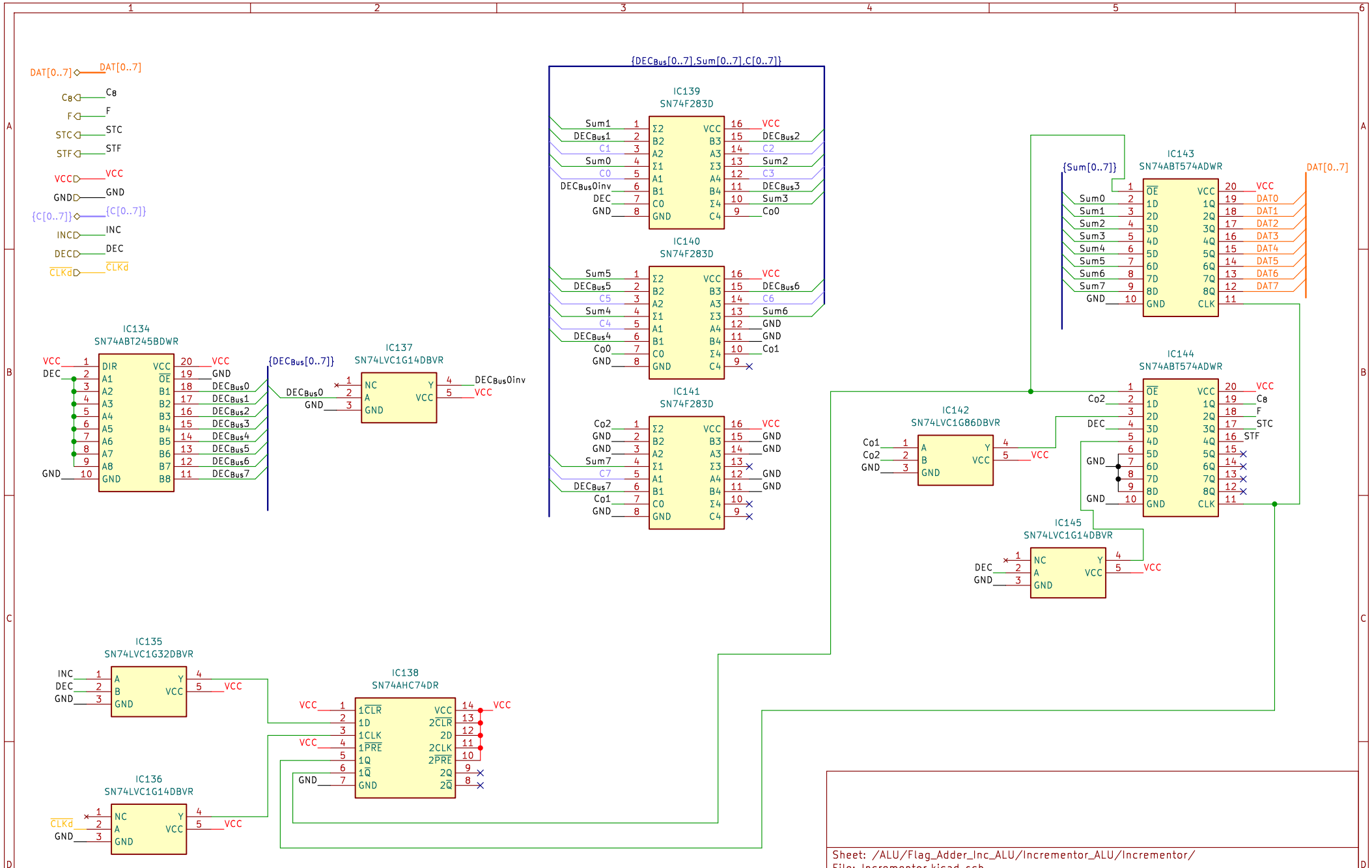

Sheet: /ALU/Flag_Adder_Inc_ALU/Incrementor_ALU/Incrementor/
File: Incrementor.kicad_sch

Title: Incrementor

Size: A4	Date: 2026-03-21	Rev: 2.7
KiCad E.D.A. 9.0.5		Id: 19/48

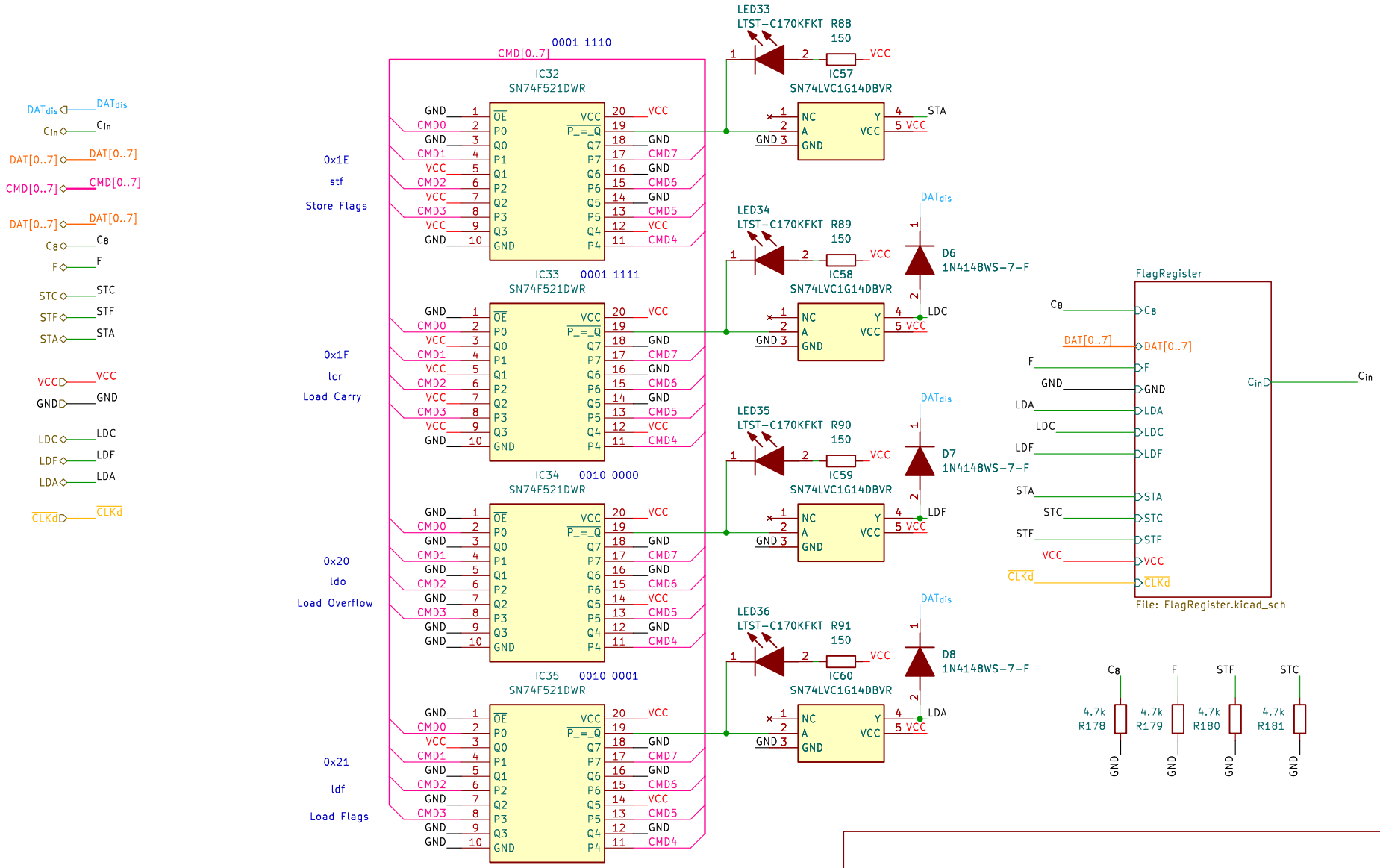

Sheet: /ALU/Flag_Adder_Inc_ALU/FlagRegister_ALU/
File: FlagRegister_ALU.kicad_sch

Title: FlagRegister_ALU

Size: A4	Date: 2026-03-21	Rev: 2.7
KiCad E.D.A. 9.0.5		Id: 20/48

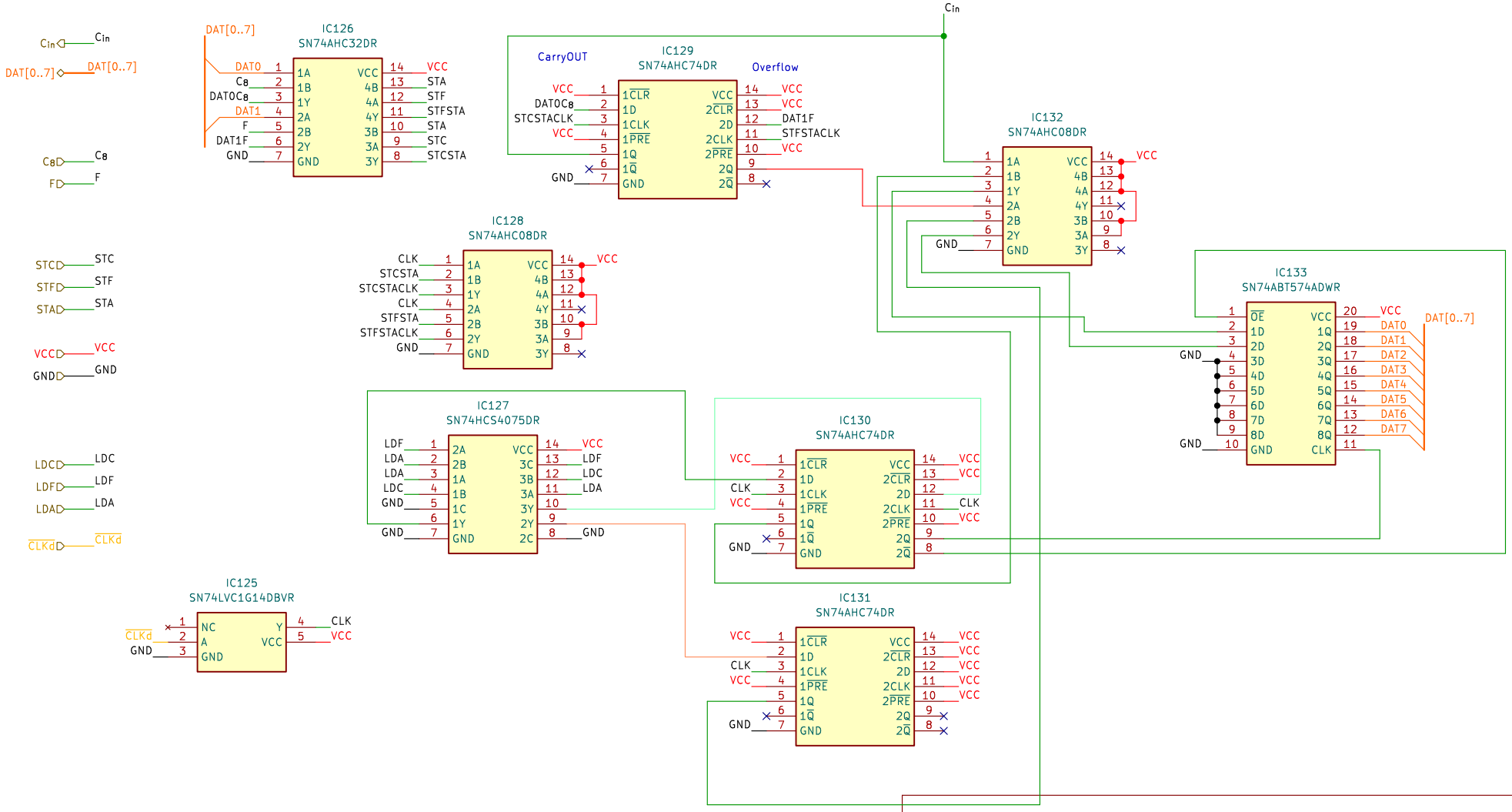

Sheet: /ALU/Flag_Adder_Inc_ALU/FlagRegister_ALU/FlagRegister/
File: FlagRegister.kicad_sch

Title: FlagRegister

Size: A4	Date: 2026-03-21	Rev: 2.7
KiCad E.D.A. 9.0.5		Id: 21/48

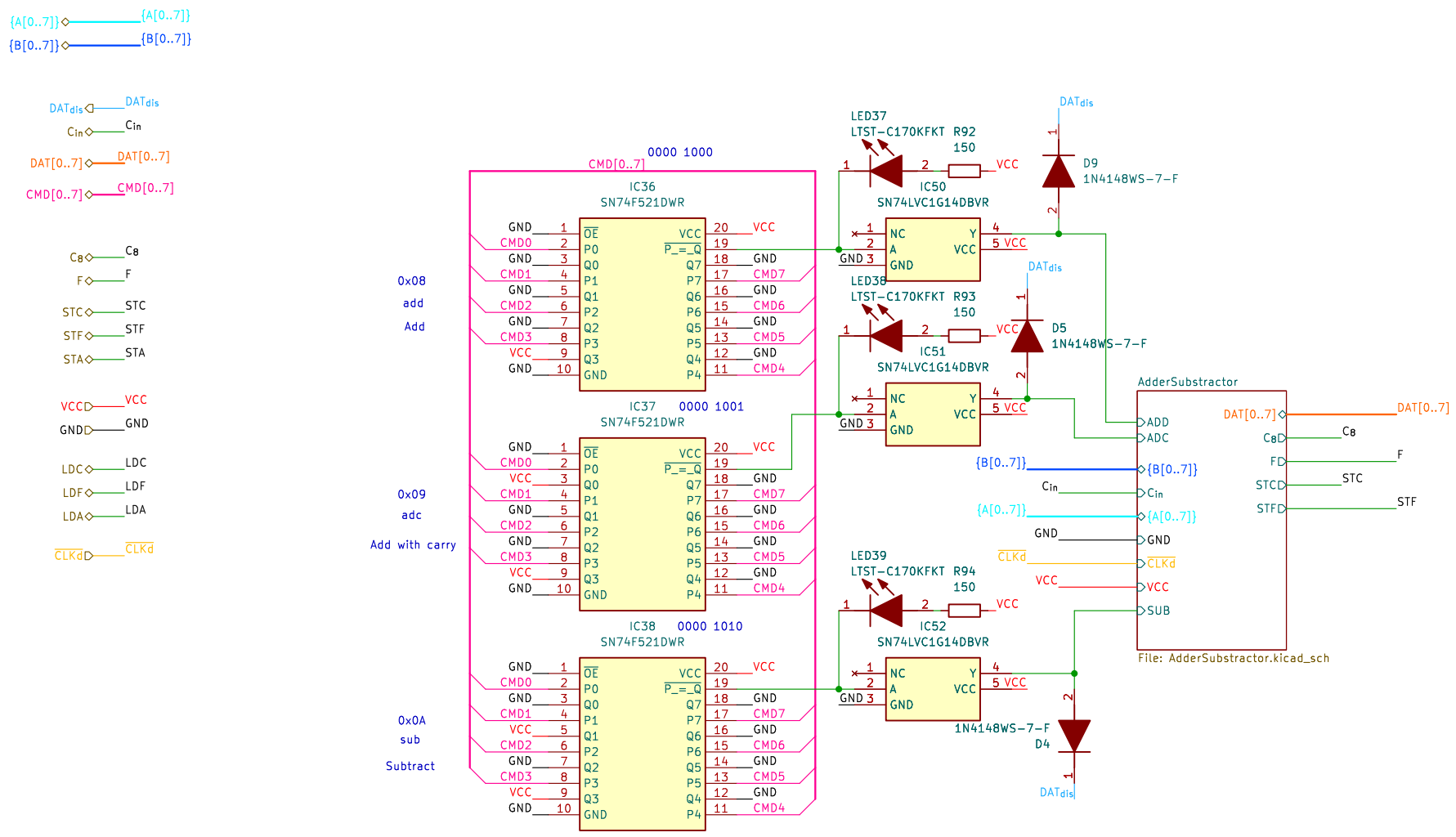

Sheet: /ALU/Flag_Adder_Inc_ALU/AdderSubstractor_ALU/
File: AdderSubstractor_ALU.kicad_sch

Title: AdderSubstractor_ALU

Size: A4	Date: 2026-03-21	**Rev: 2.7**
KiCad E.D.A. 9.0.5		Id: 22/48

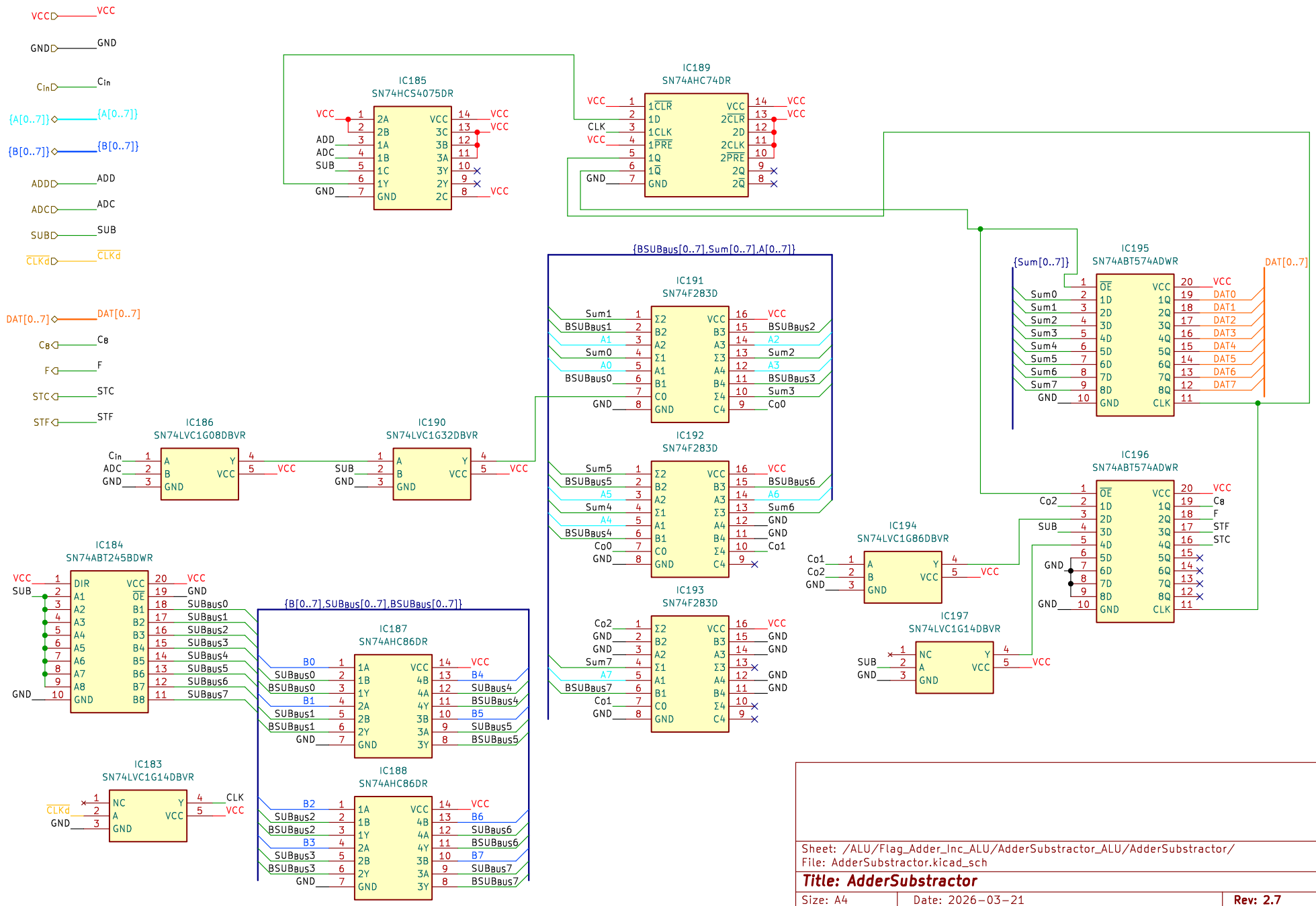
VCC
GND
Cin
{A[0..7]}
{B[0..7]}
ADD
ADC
SUB
CLKd
DAT[0..7]
C8
F
STC
STF
IC185
SN74HCS4075DR
IC189
SN74AHC74DR
{BSUBBUS[0..7],Sum[0..7],A[0..7]}
IC191
SN74F283D
IC192
SN74F283D
IC193
SN74F283D
IC195
SN74ABT574ADWR
{Sum[0..7]}
IC196
SN74ABT574ADWR
IC186
SN74LVC1G08DBVR
IC190
SN74LVC1G32DBVR
IC194
SN74LVC1G86DBVR
IC197
SN74LVC1G14DBVR
IC184
SN74ABT245BDWR
{B[0..7],SUBBUS[0..7],BSUBBUS[0..7]}
IC187
SN74AHC86DR
IC188
SN74AHC86DR
IC183
SN74LVC1G14DBVR
Sheet: /ALU/Flag_Adder_Inc_ALU/AdderSubstractor_ALU/AdderSubstractor/
File: AdderSubstractor.kicad_sch
Title: AdderSubstractor
Size: A4
Date: 2026-03-21
Rev: 2.7
KiCad E.D.A. 9.0.5
Id: 23/48

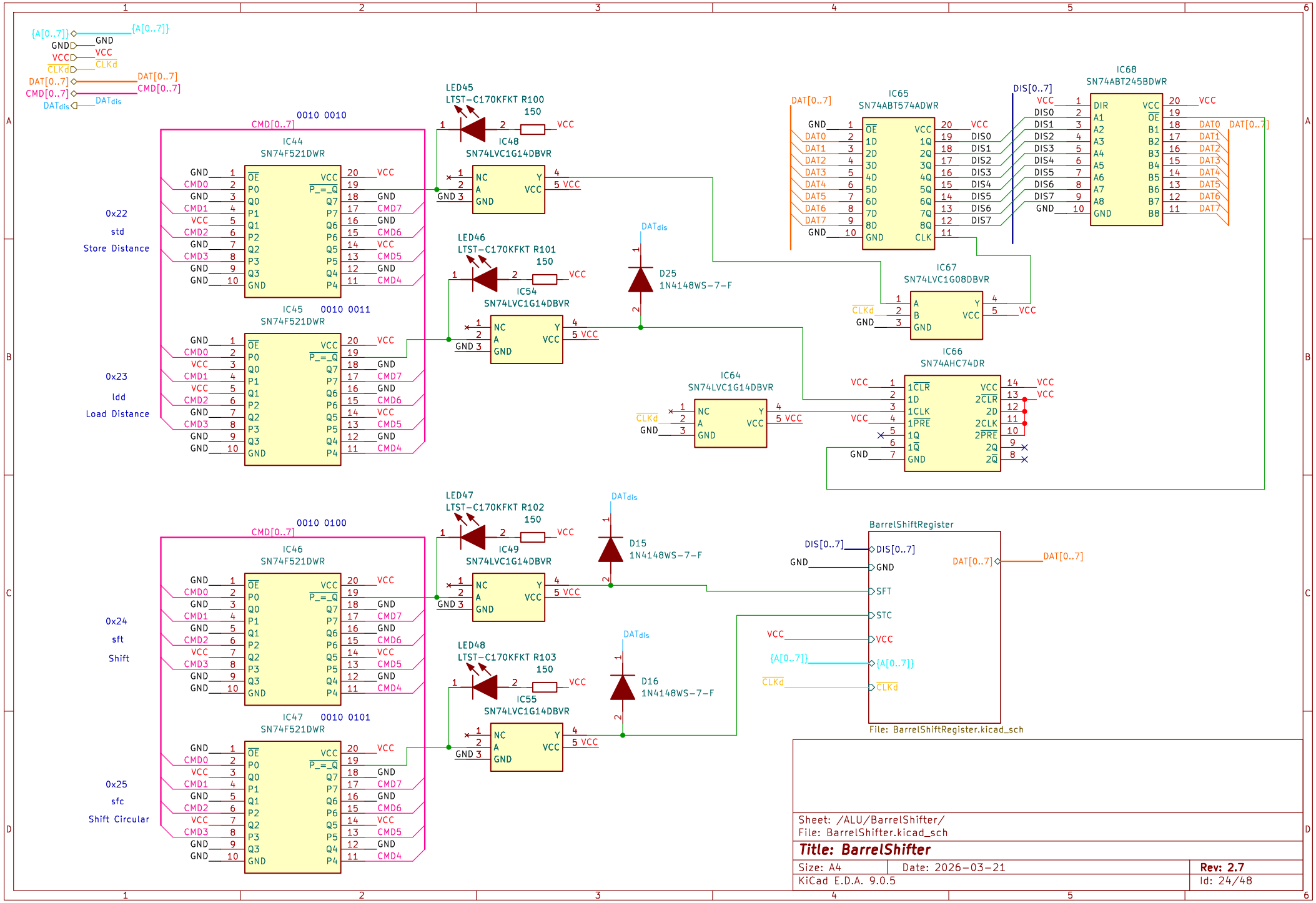
{A[0..7]}
GND
VCC
CLKd
DAT[0..7]
CMD[0..7]
DATdis
0010 0010
IC44
SN74F521DWR
0x22
std
Store Distance
0010 0011
IC45
SN74F521DWR
0x23
ldd
Load Distance
LED45
LTST-C170KFKT R100
150
IC48
SN74LVC1G14DBVR
LED46
LTST-C170KFKT R101
IC54
SN74LVC1G14DBVR
D25
1N4148WS-7-F
IC64
SN74LVC1G14DBVR
IC65
SN74ABT574ADWR
IC67
SN74LVC1G08DBVR
IC68
SN74ABT245BDWR
IC66
SN74AHC74DR
0010 0100
IC46
SN74F521DWR
0x24
sft
Shift
0010 0101
IC47
SN74F521DWR
0x25
sfc
Shift Circular
LED47
LTST-C170KFKT R102
IC49
SN74LVC1G14DBVR
D15
1N4148WS-7-F
LED48
LTST-C170KFKT R103
IC55
SN74LVC1G14DBVR
D16
1N4148WS-7-F
BarrelShiftRegister
DIS[0..7]
SFT
STC
File: BarrelShiftRegister.kicad_sch
Sheet: /ALU/BarrelShifter/
File: BarrelShifter.kicad_sch
Title: BarrelShifter
Size: A4
Date: 2026-03-21
Rev: 2.7
KiCad E.D.A. 9.0.5
Id: 24/48

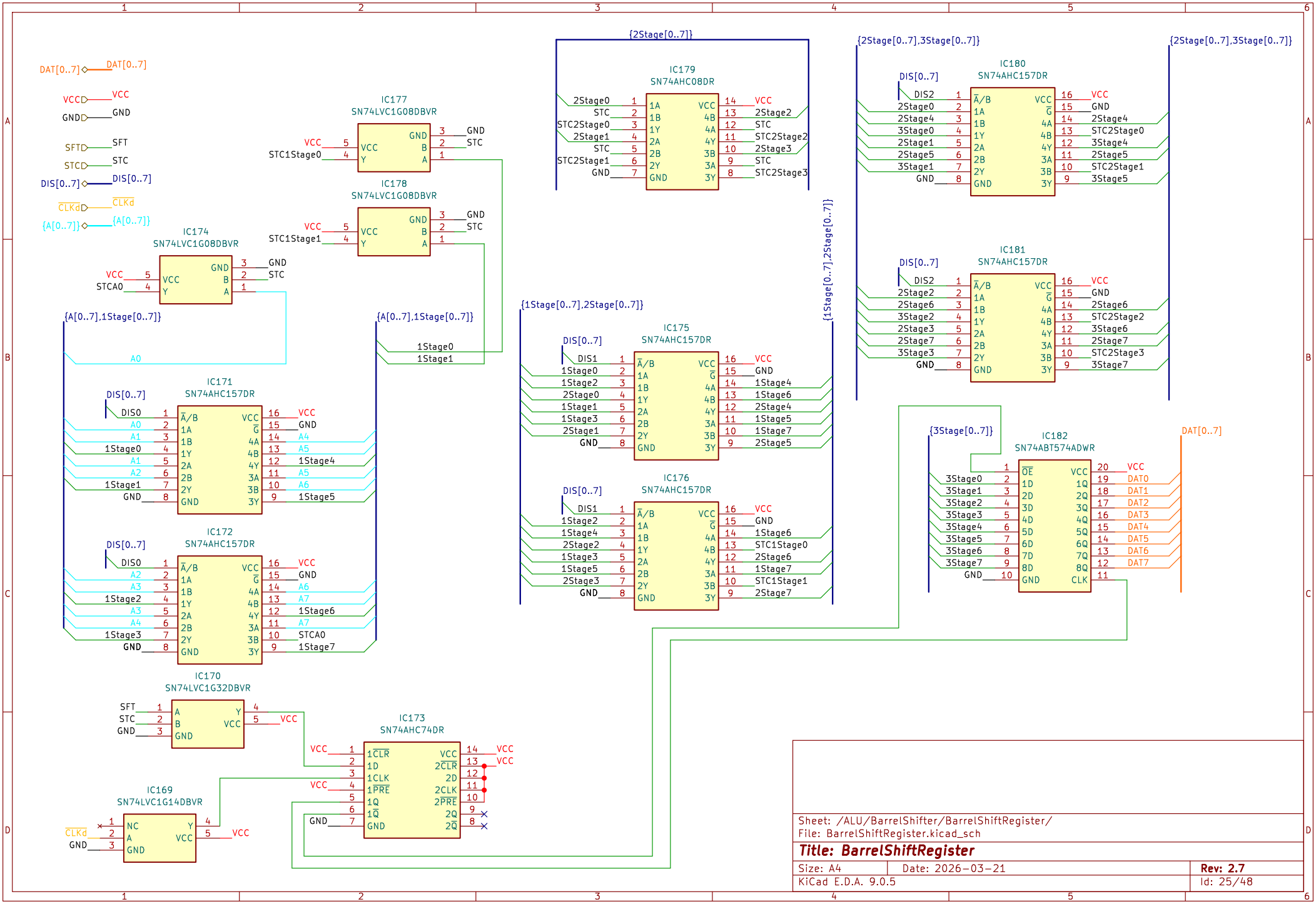

Sheet: /ALU/BarrelShifter/BarrelShiftRegister/
File: BarrelShiftRegister.kicad_sch

Title: BarrelShiftRegister

Size: A4	Date: 2026-03-21	Rev: 2.7
KiCad E.D.A. 9.0.5		Id: 25/48

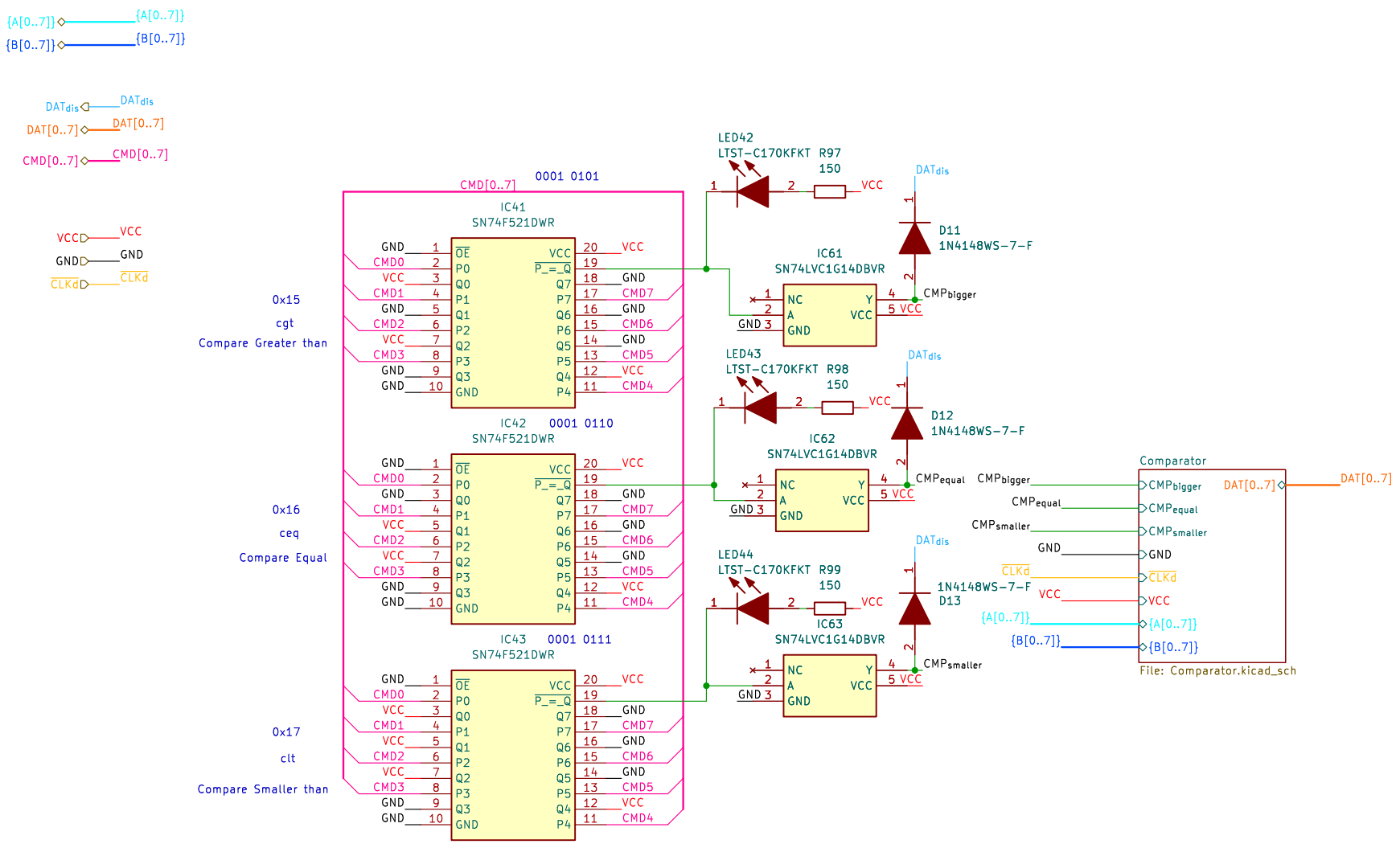

Sheet: /ALU/Comparator_ALU/
File: Comparator_ALU.kicad_sch

Title: Comparator_ALU

Size: A4	Date: 2026-03-21	Rev: 2.7
KiCad E.D.A. 9.0.5		Id: 26/48

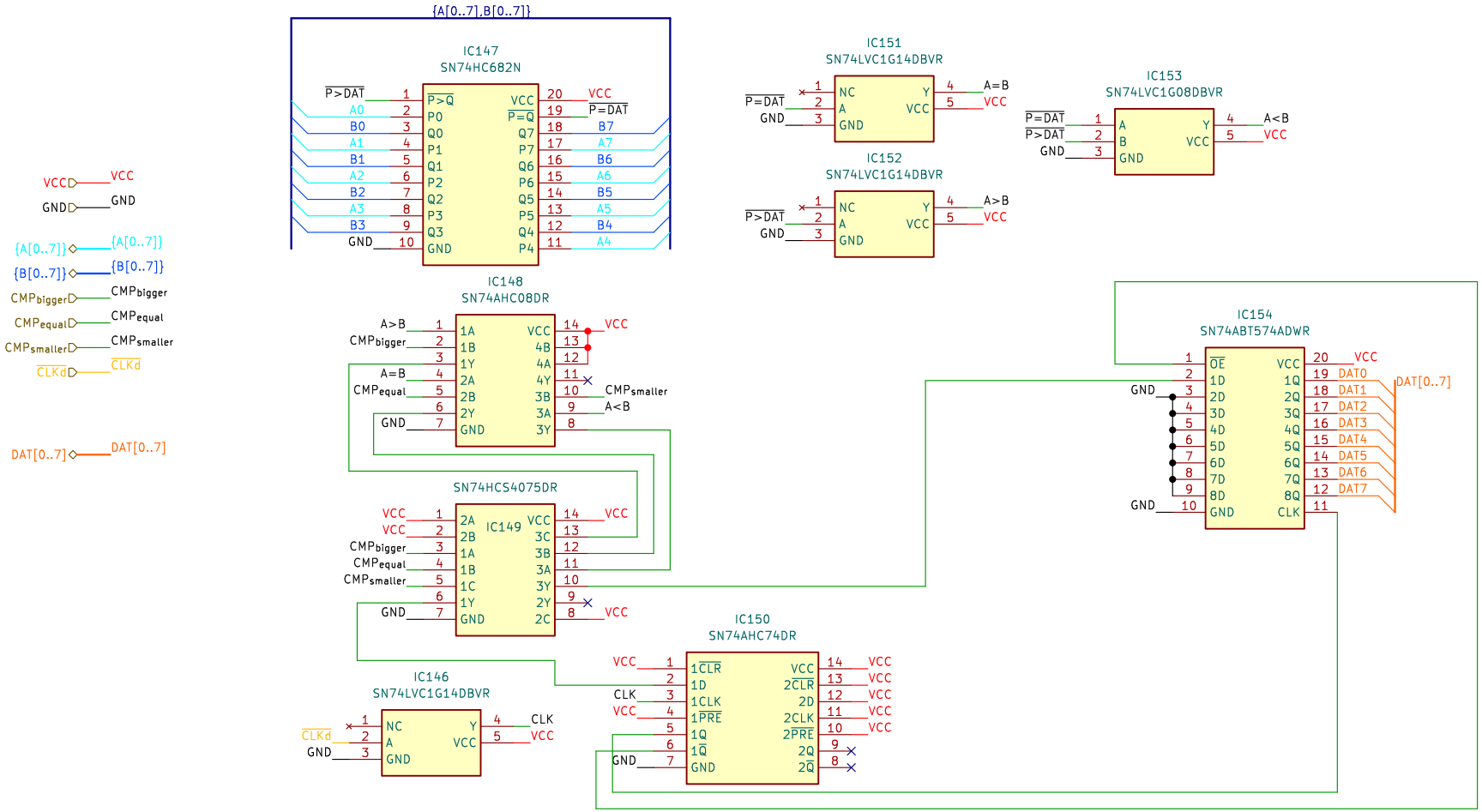

Sheet: /ALU/Comparator_ALU/Comparator/
File: Comparator.kicad_sch

Title: Comparator

Size: A4	Date: 2026-03-21	**Rev: 2.7**
KiCad E.D.A. 9.0.5		Id: 27/48

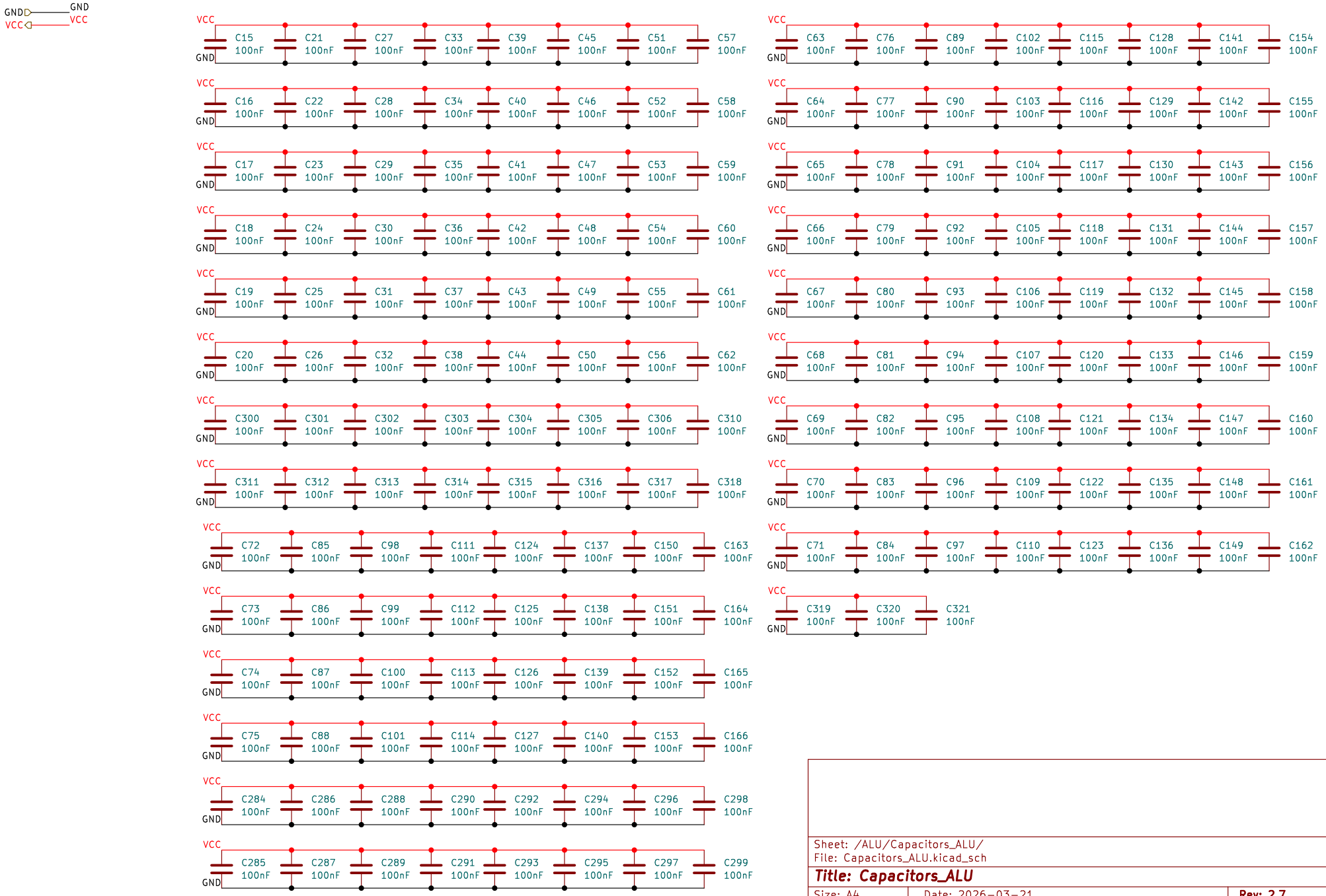

Sheet: /ALU/Capacitors_ALU/
File: Capacitors_ALU.kicad_sch

Title: Capacitors_ALU

Size: A4	Date: 2026-03-21	Rev: 2.7
KiCad E.D.A. 9.0.5		Id: 28/48

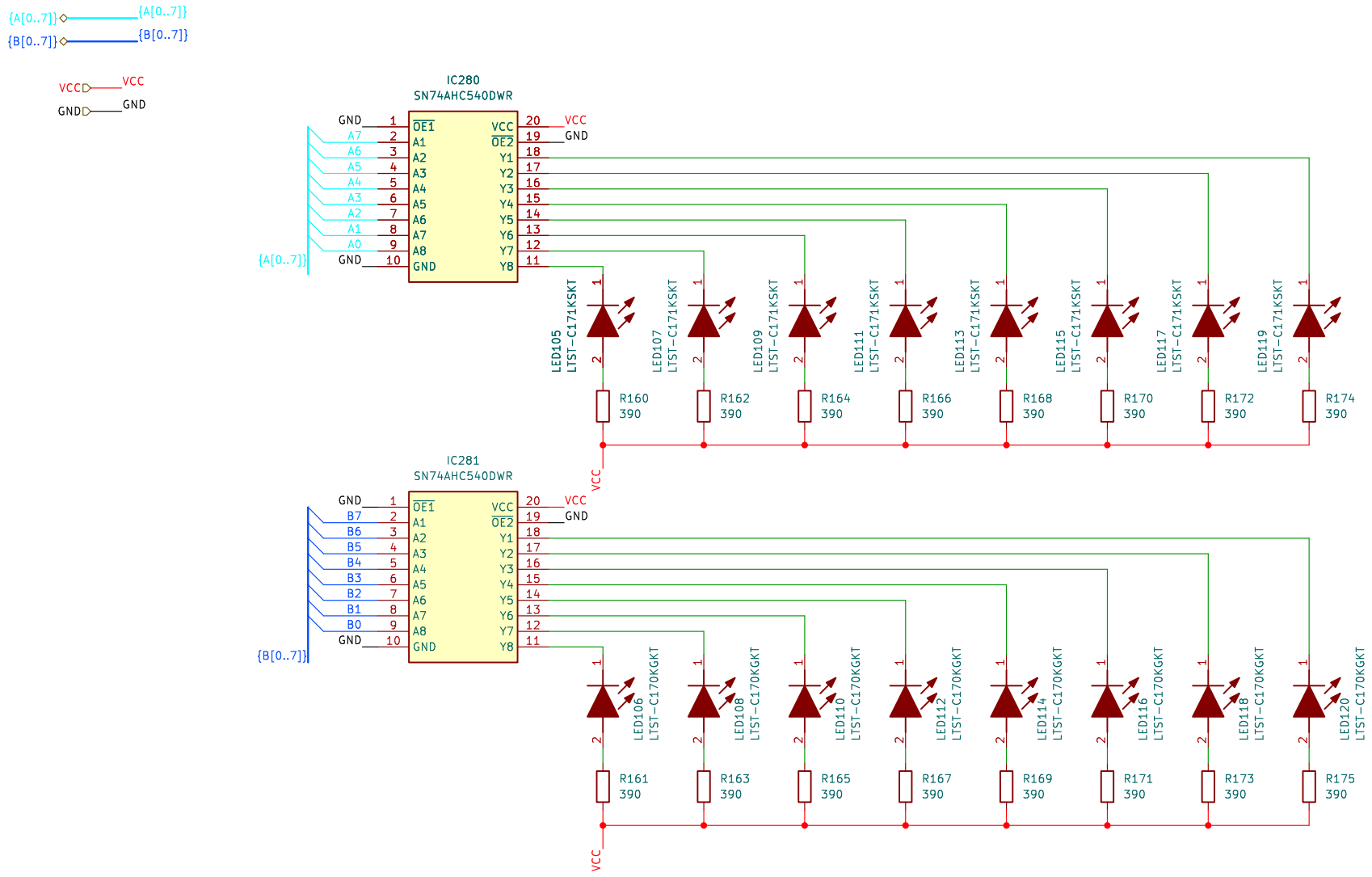

Sheet: /ALU/AB_Bus_LEDs_ALU/
File: AB_Bus_LEDs_ALU.kicad_sch

Title: AB_Bus_LEDs_ALU

Size: A4	Date: 2026-03-21	Rev: 2.7
KiCad E.D.A. 9.0.5		Id: 29/48

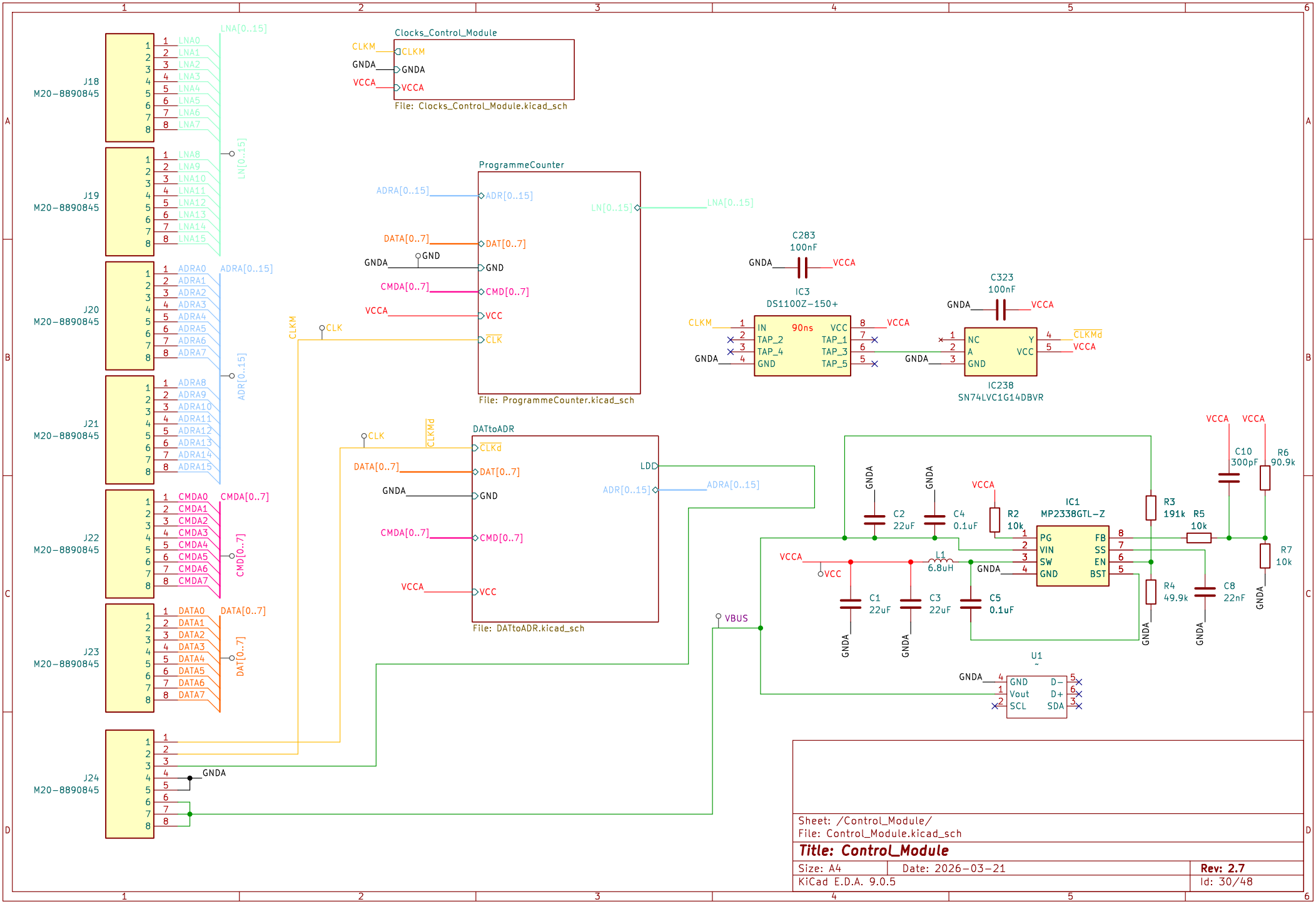
Clocks_Control_Module
File: Clocks_Control_Module.kicad_sch
ProgrammeCounter
File: ProgrammeCounter.kicad_sch
DATtoADR
File: DATtoADR.kicad_sch
J18 M20-8890845
J19 M20-8890845
J20 M20-8890845
J21 M20-8890845
J22 M20-8890845
J23 M20-8890845
J24 M20-8890845
C283 100nF
IC3 DS1100Z-150+
C323 100nF
IC238 SN74LVC1G14DBVR
IC1 MP2338GTL-Z
U1
Sheet: /Control_Module/
File: Control_Module.kicad_sch
Title: Control_Module
Size: A4
Date: 2026-03-21
Rev: 2.7
KiCad E.D.A. 9.0.5
Id: 30/48

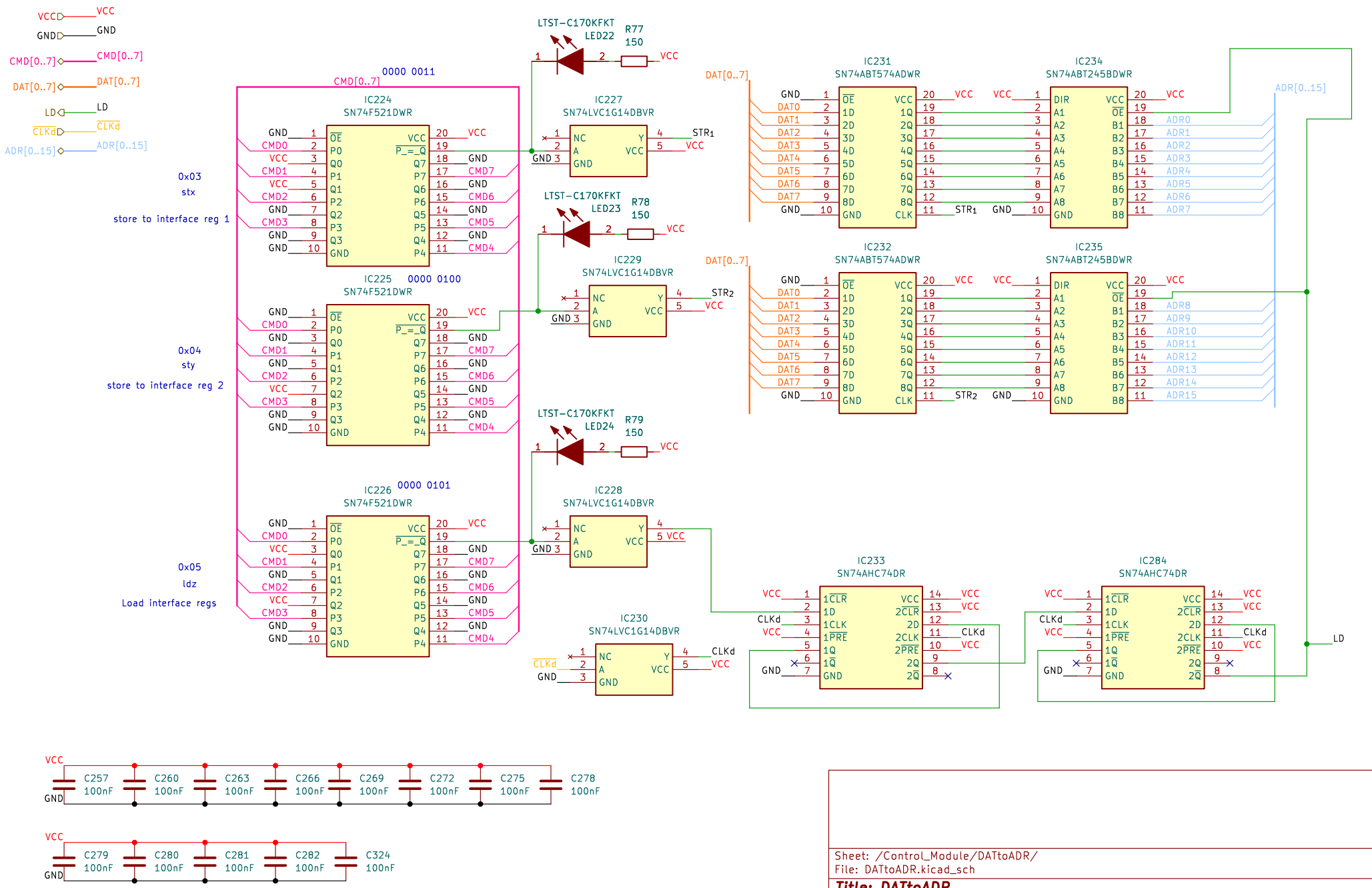

Sheet: /Control_Module/DATtoADR/
File: DATtoADR.kicad_sch

Title: DATtoADR

Size: A4	Date: 2026-03-21	Rev: 2.7
KiCad E.D.A. 9.0.5		Id: 31/48

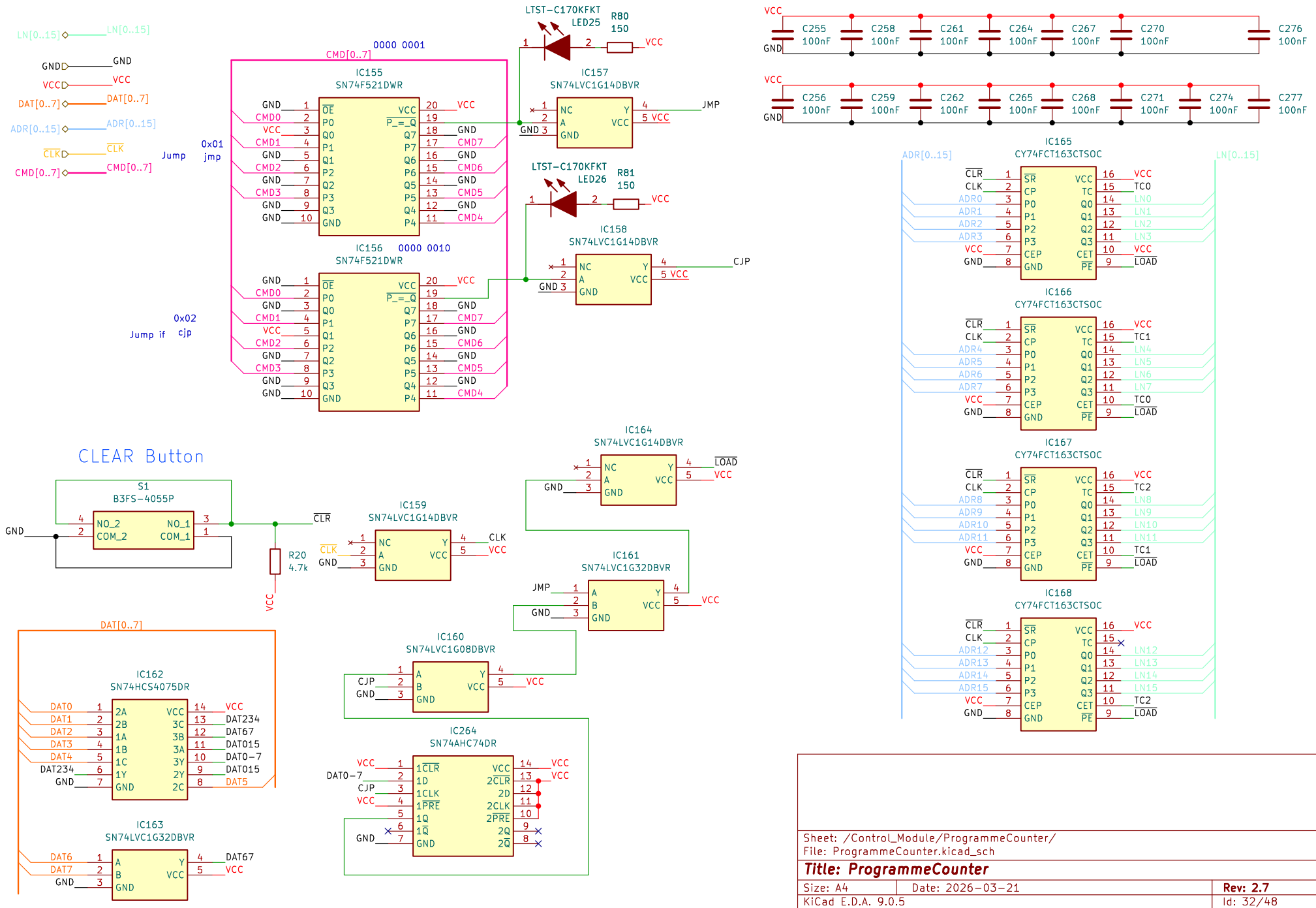

Sheet: /Control_Module/ProgrammeCounter/
File: ProgrammeCounter.kicad_sch

Title: ProgrammeCounter

Size: A4	Date: 2026-03-21	Rev: 2.7
KiCad E.D.A. 9.0.5		Id: 32/48

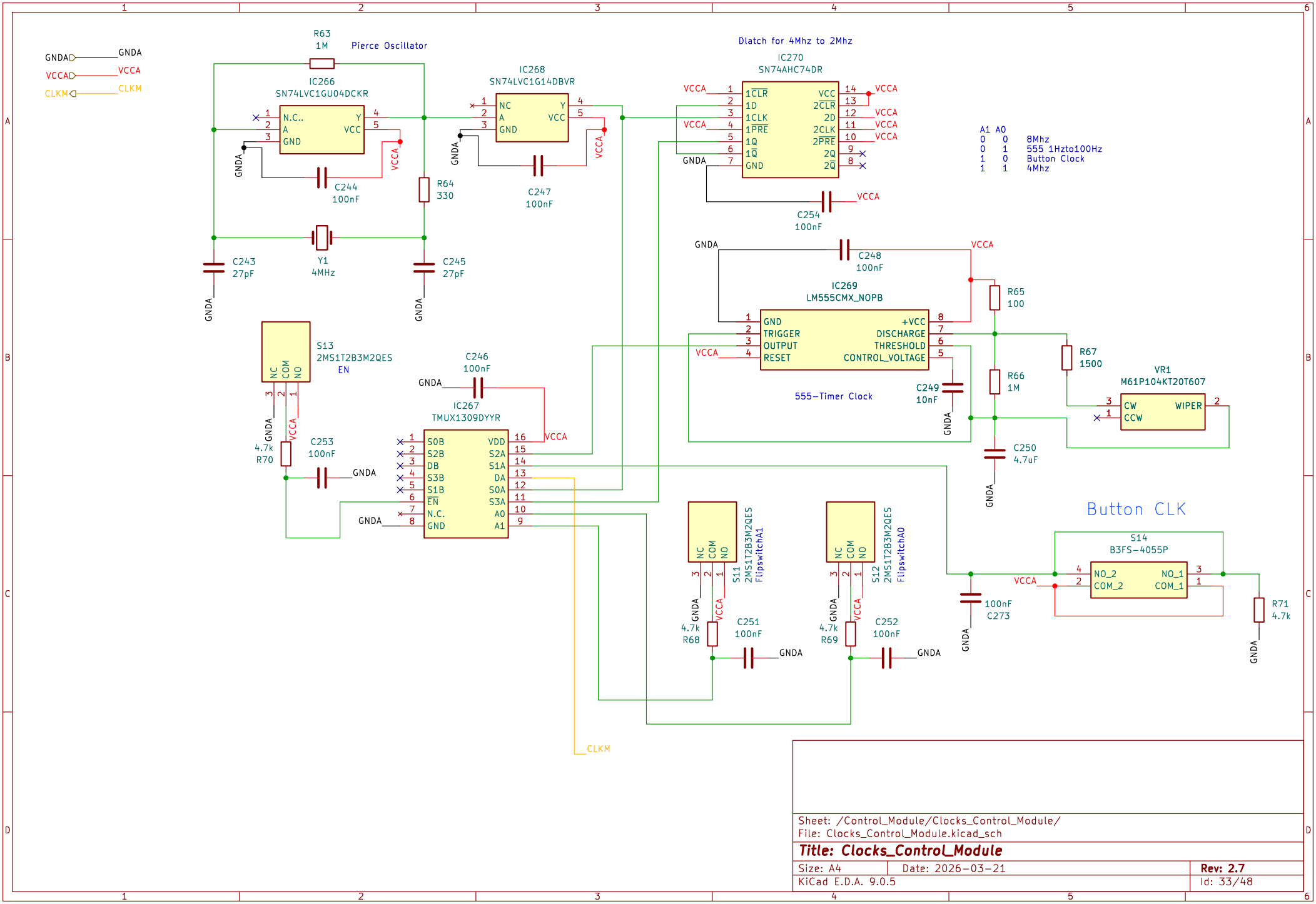

Sheet: /Control_Module/Clocks_Control_Module/
File: Clocks_Control_Module.kicad_sch

Title: Clocks_Control_Module

Size: A4	Date: 2026-03-21	Rev: 2.7
KiCad E.D.A. 9.0.5		Id: 33/48

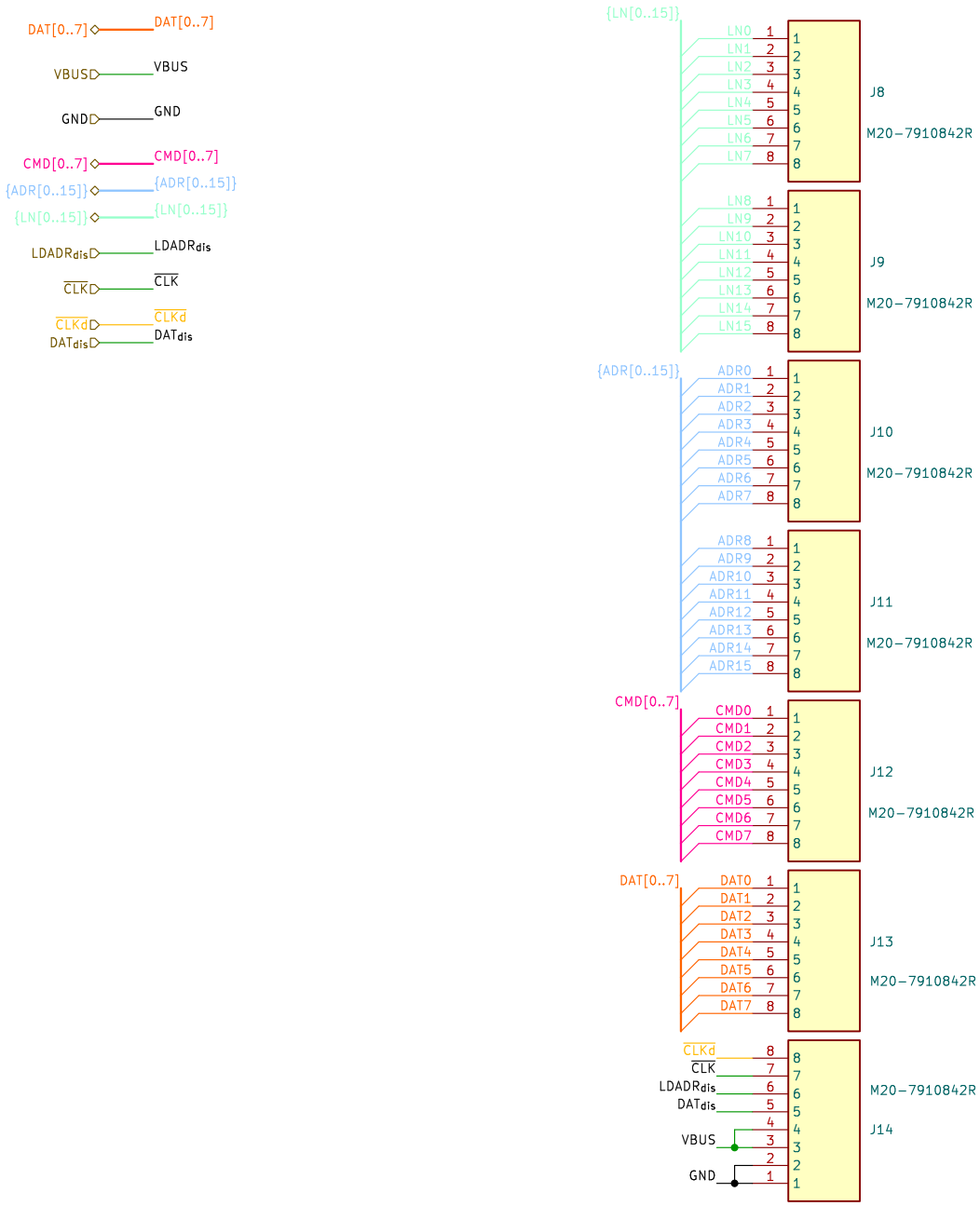

Sheet: /ALU_Memory_Module/
File: ALU_Memory_Module.kicad_sch

Title: ALU_Memory_Module

Size: A4	Date: 2026-03-21	**Rev: 2.7**
KiCad E.D.A. 9.0.5		Id: 34/48

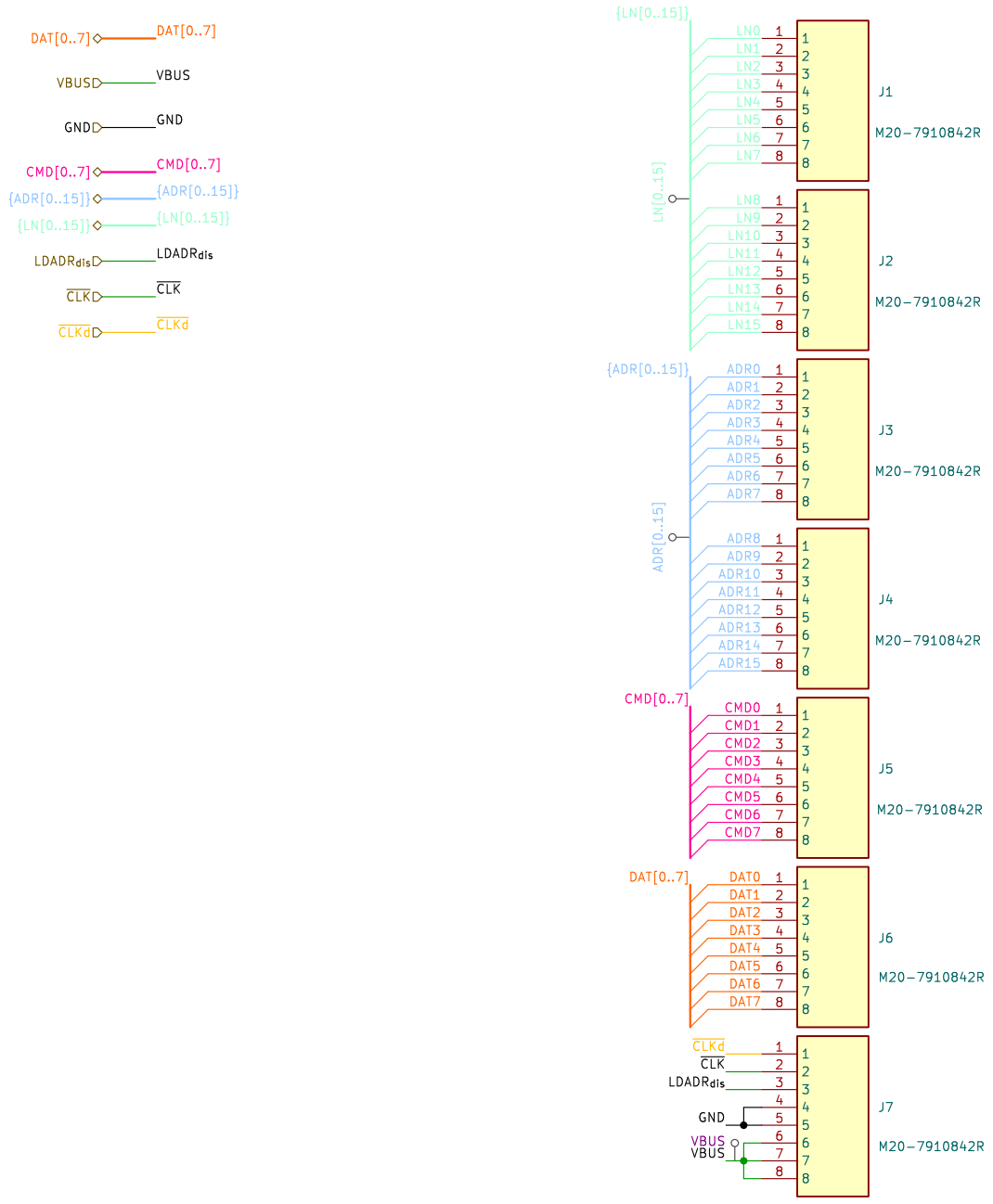

Sheet: /ALU_Control_Module/
File: ALU_Control_Module.kicad_sch

Title: ALU_Control_Module

Size: A4	Date: 2026-03-21	Rev: 2.7
KiCad E.D.A. 9.0.5		Id: 35/48

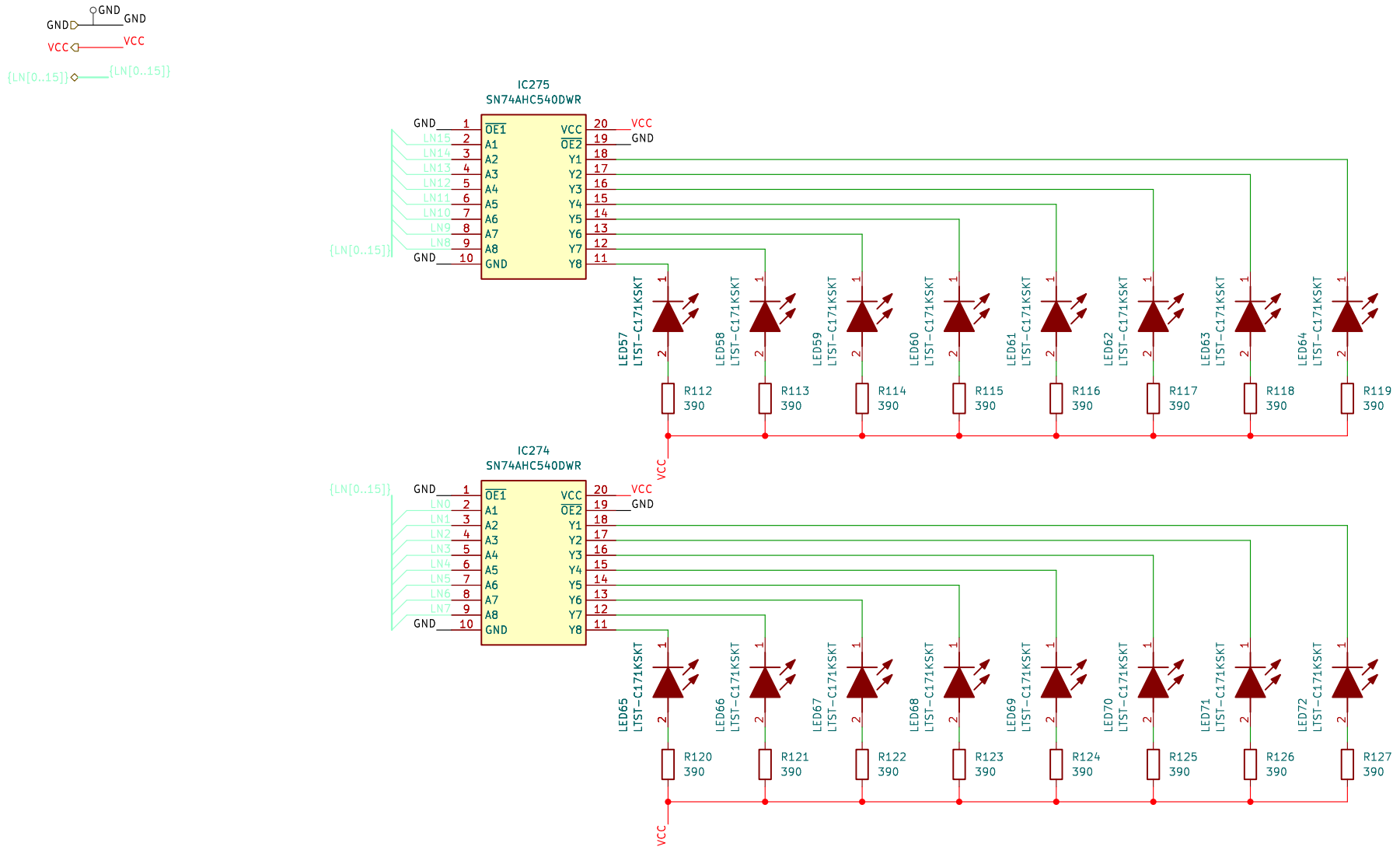

Sheet: /LN_Bus_LEDs_ALU/
File: LN_Bus_LEDs_ALU.kicad_sch

Title: LN_Bus_LEDs_ALU

Size: A4	Date: 2026-03-21	Rev: 2.7
KiCad E.D.A. 9.0.5		Id: 36/48

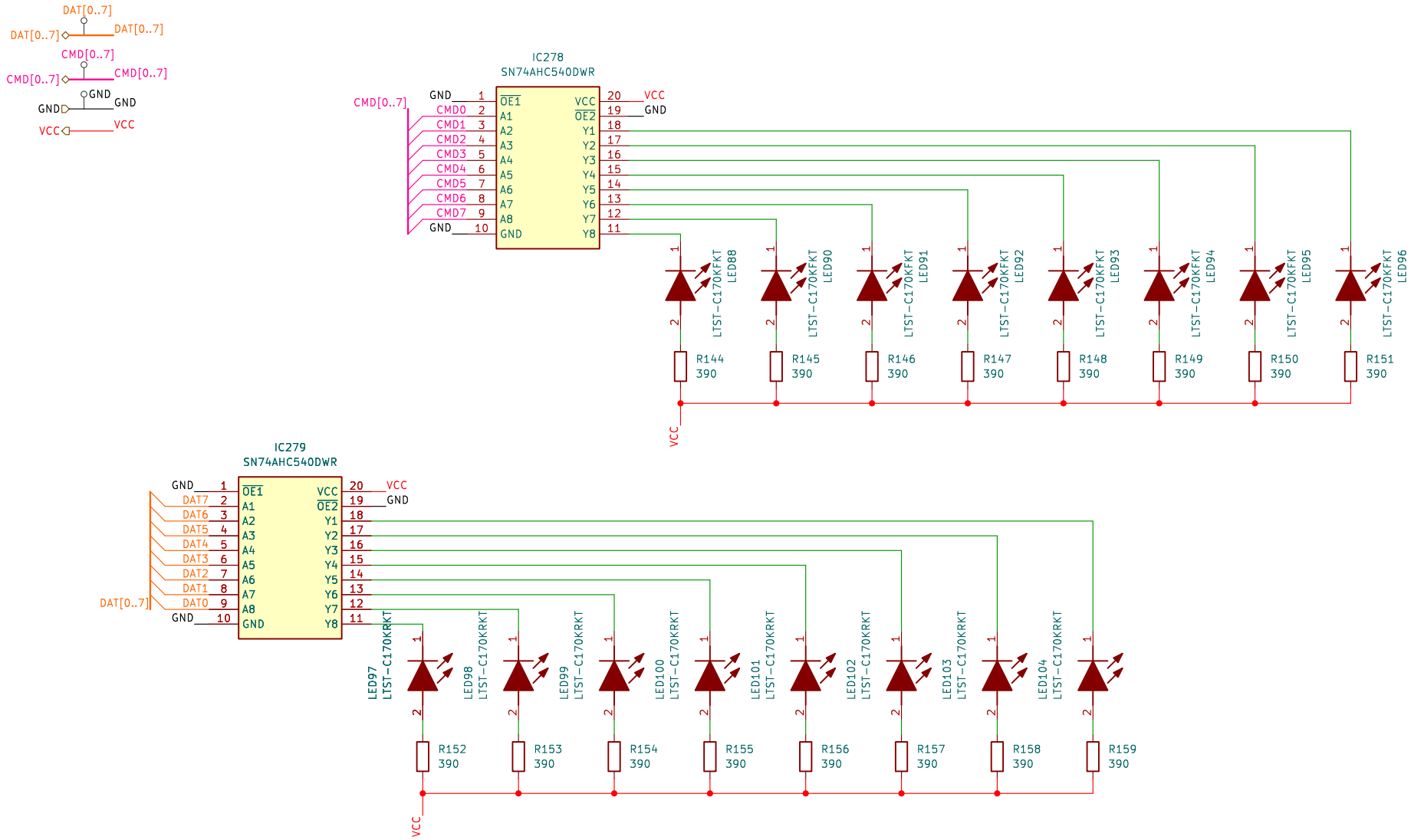

Sheet: /CMDDAT_Bus_LEDs_ALU/
File: CMDDAT_Bus_LEDs_ALU.kicad_sch

Title: CMDDAT_Bus_LEDs_ALU

Size: A4	Date: 2026-03-21	Rev: 2.7
KiCad E.D.A. 9.0.5		Id: 37/48

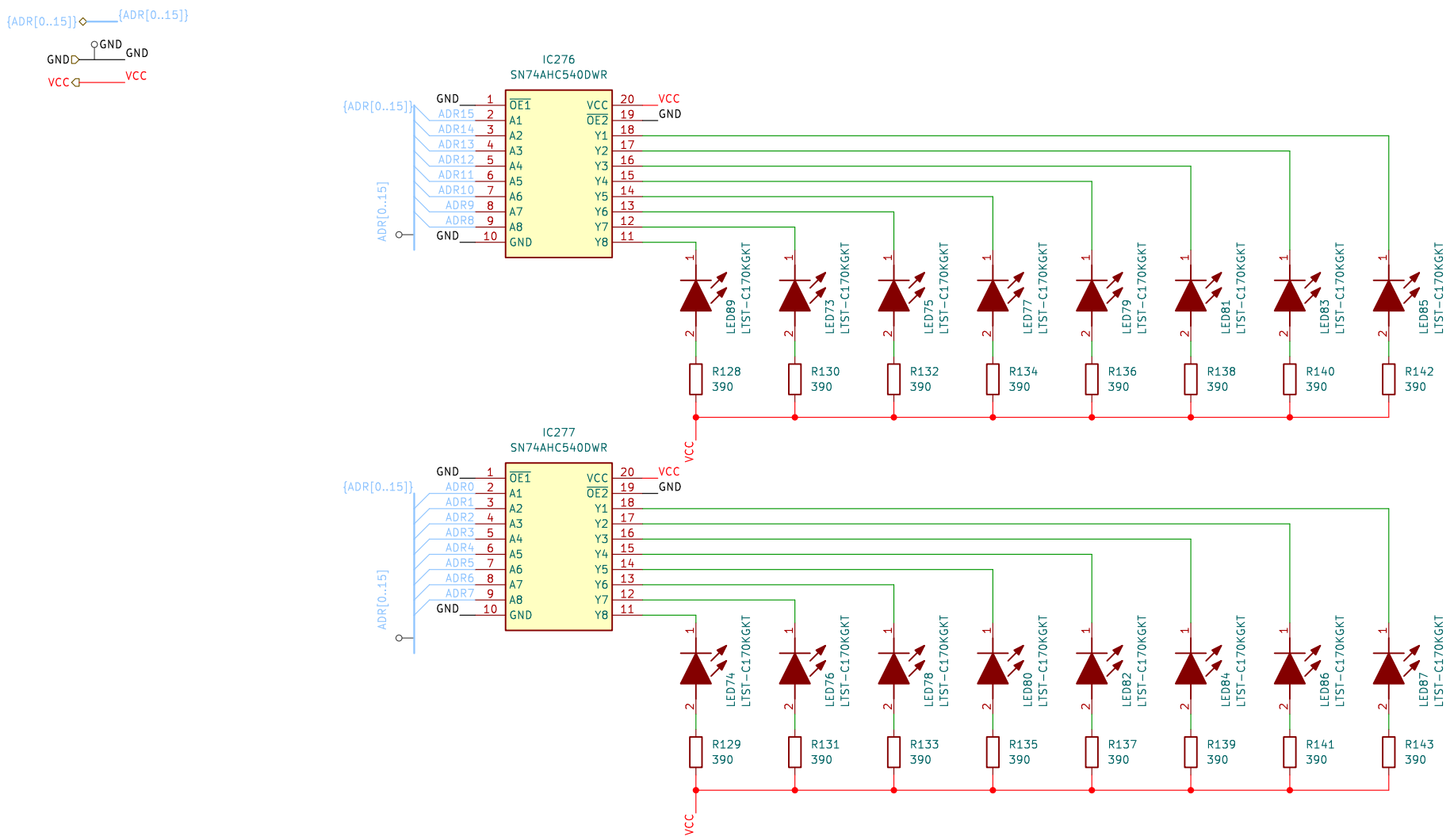

Sheet: /ADR_Bus_LEDs_ALU/
File: ADR_Bus_LEDs_ALU.kicad_sch

Title: ADR_Bus_LEDs_ALU

Size: A4	Date: 2026-03-21	Rev: 2.7
KiCad E.D.A. 9.0.5		Id: 38/48

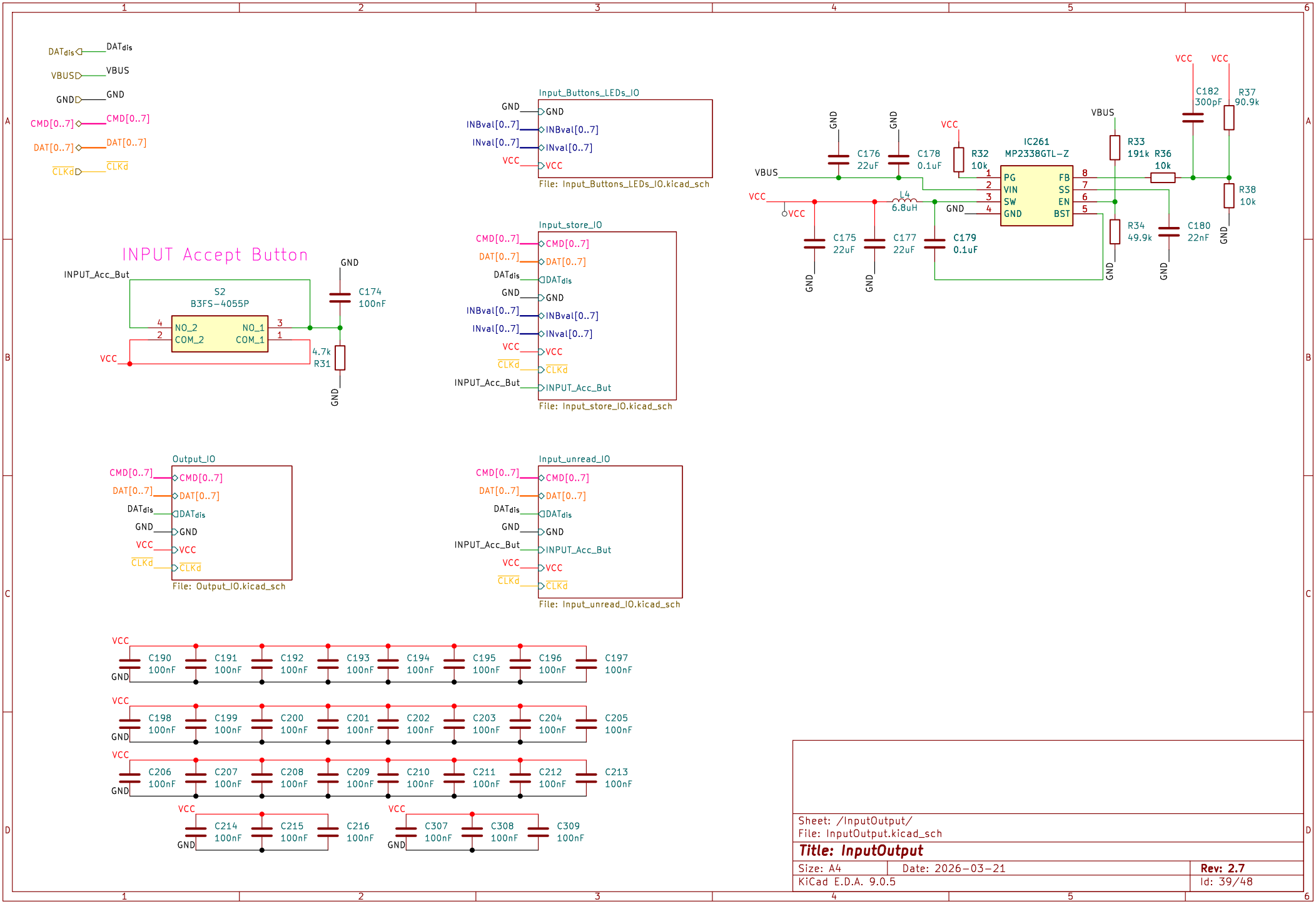
DATdis
VBUS
GND
CMD[0..7]
DAT[0..7]
CLKd
Input_Buttons_LEDs_IO
INBval[0..7]
INval[0..7]
VCC
File: Input_Buttons_LEDs_IO.kicad_sch
INPUT Accept Button
INPUT_Acc_But
S2
B3FS-4055P
NO_2
COM_2
NO_1
COM_1
C174
100nF
4.7k
R31
Input_store_IO
File: Input_store_IO.kicad_sch
IC261
MP2338GTL-Z
PG
VIN
SW
GND
FB
SS
EN
BST
C176
22uF
C178
0.1uF
R32
10k
L4
6.8uH
C175
22uF
C177
22uF
C179
0.1uF
R33
191k
R36
10k
R34
49.9k
C182
300pF
R37
90.9k
R38
10k
C180
22nF
Output_IO
File: Output_IO.kicad_sch
Input_unread_IO
File: Input_unread_IO.kicad_sch
C190 100nF
C191 100nF
C192 100nF
C193 100nF
C194 100nF
C195 100nF
C196 100nF
C197 100nF
C198 100nF
C199 100nF
C200 100nF
C201 100nF
C202 100nF
C203 100nF
C204 100nF
C205 100nF
C206 100nF
C207 100nF
C208 100nF
C209 100nF
C210 100nF
C211 100nF
C212 100nF
C213 100nF
C214 100nF
C215 100nF
C216 100nF
C307 100nF
C308 100nF
C309 100nF
Sheet: /InputOutput/
File: InputOutput.kicad_sch
Title: InputOutput
Size: A4
Date: 2026-03-21
Rev: 2.7
KiCad E.D.A. 9.0.5
Id: 39/48

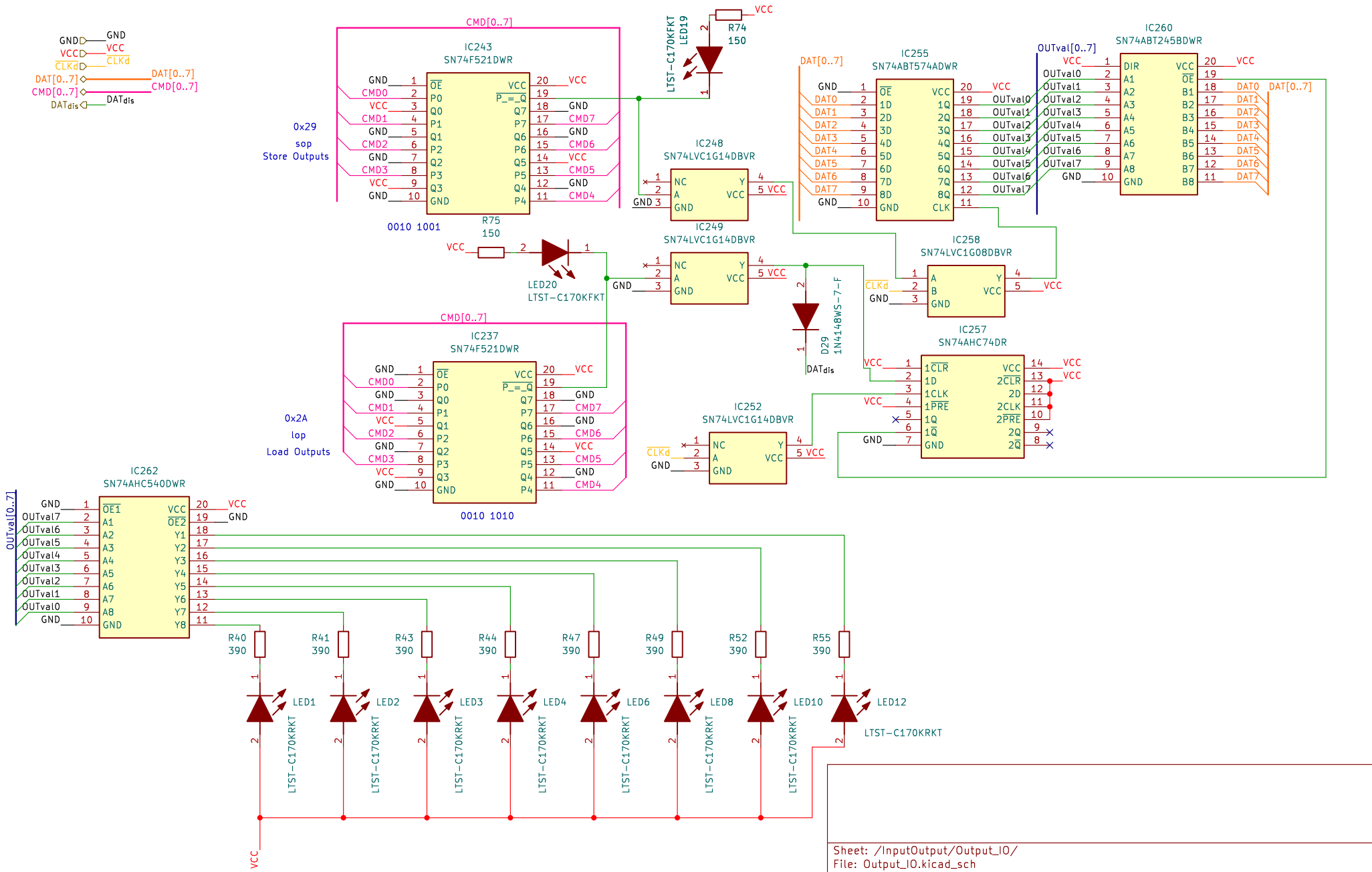

Sheet: /InputOutput/Output_IO/
File: Output_IO.kicad_sch

Title: Output_IO

Size: A4	Date: 2026-03-21	Rev: 2.7
KiCad E.D.A. 9.0.5		Id: 40/48

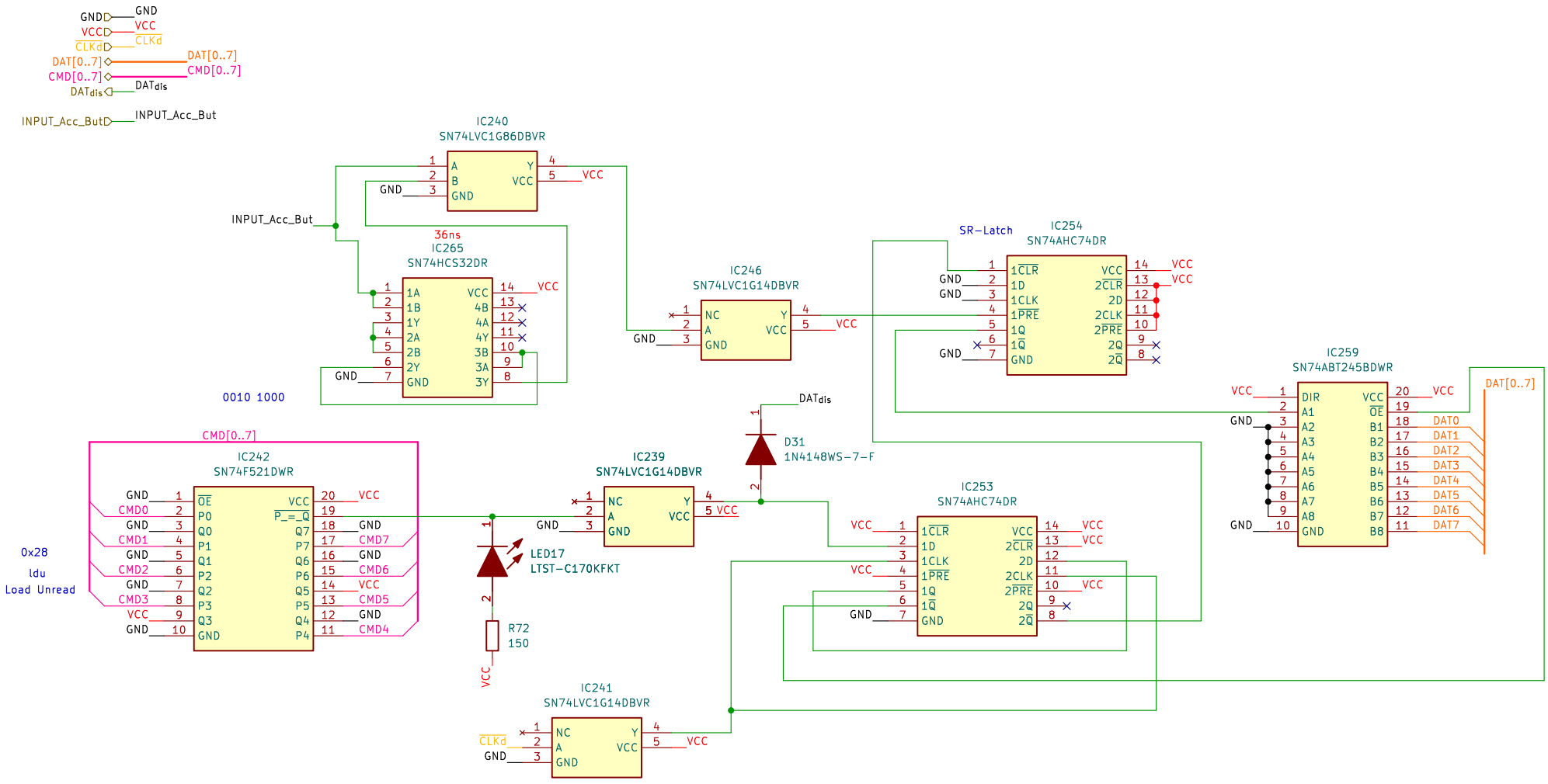

Sheet: /InputOutput/Input_unread_IO/
File: Input_unread_IO.kicad_sch

Title: Input_unread_IO

Size: A4	Date: 2026-03-21	**Rev: 2.7**
KiCad E.D.A. 9.0.5		Id: 41/48

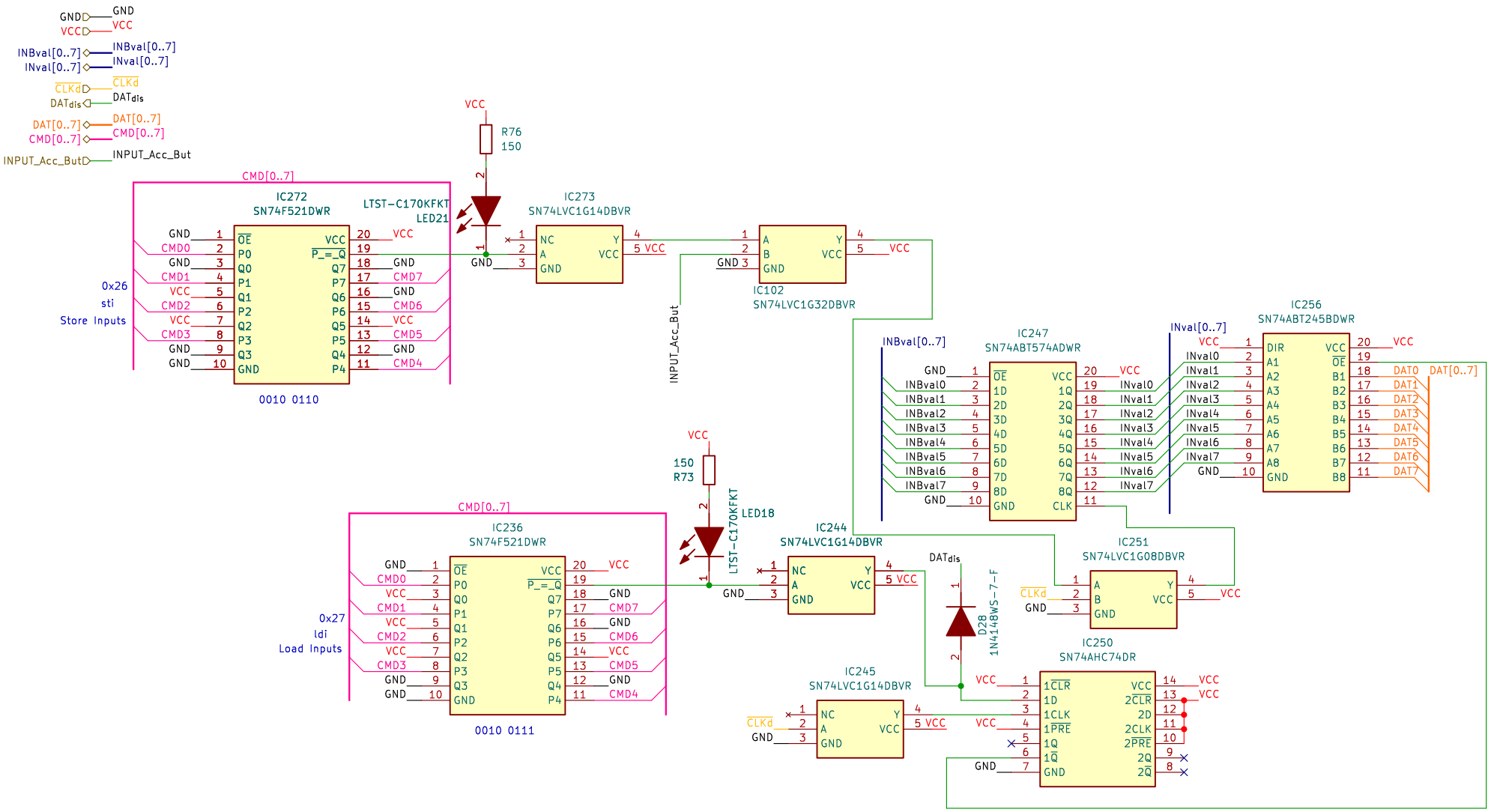

Sheet: /InputOutput/Input_store_IO/
File: Input_store_IO.kicad_sch

Title: Input_store_IO

Size: A4	Date: 2026-03-21	Rev: 2.7
KiCad E.D.A. 9.0.5		Id: 42/48

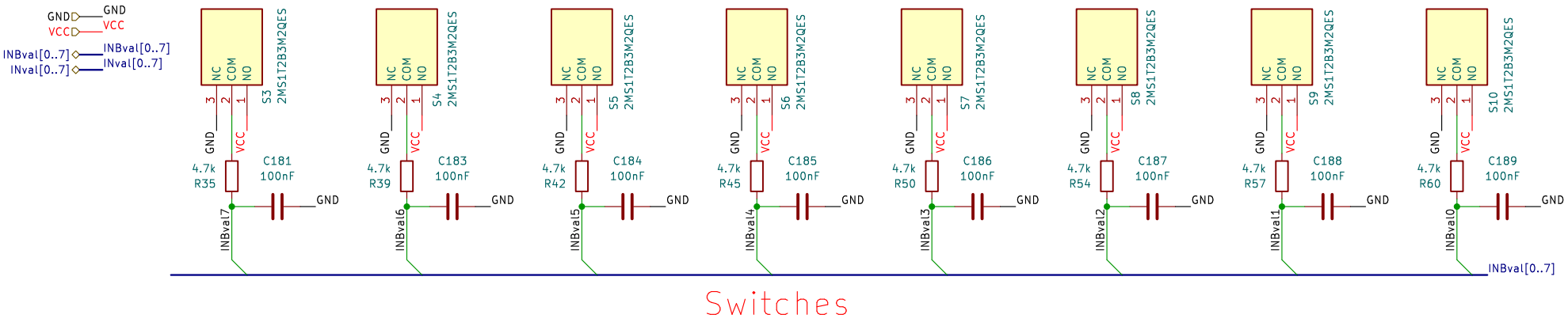

Switches

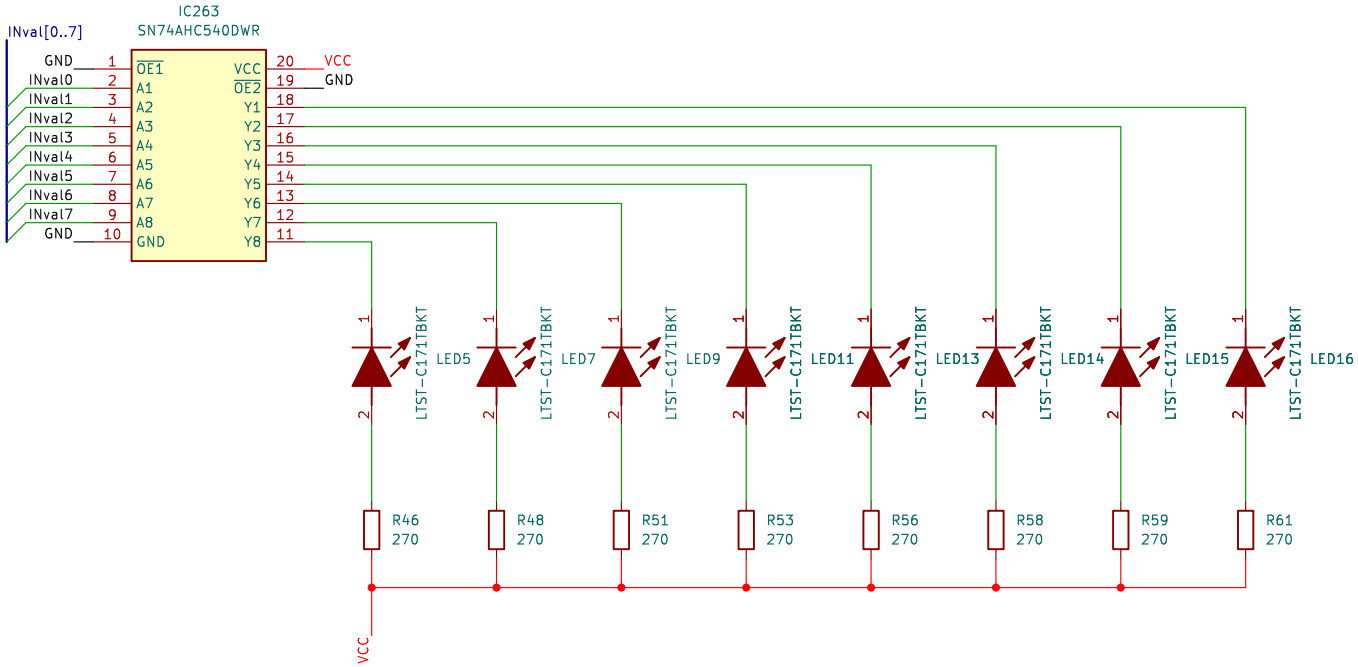

Sheet: /InputOutput/Input_Buttons_LEDs_IO/
File: Input_Buttons_LEDs_IO.kicad_sch

Title: Input_Buttons_LEDs_IO

Size: A4	Date: 2026-03-21	Rev: 2.7
KiCad E.D.A. 9.0.5		Id: 43/48

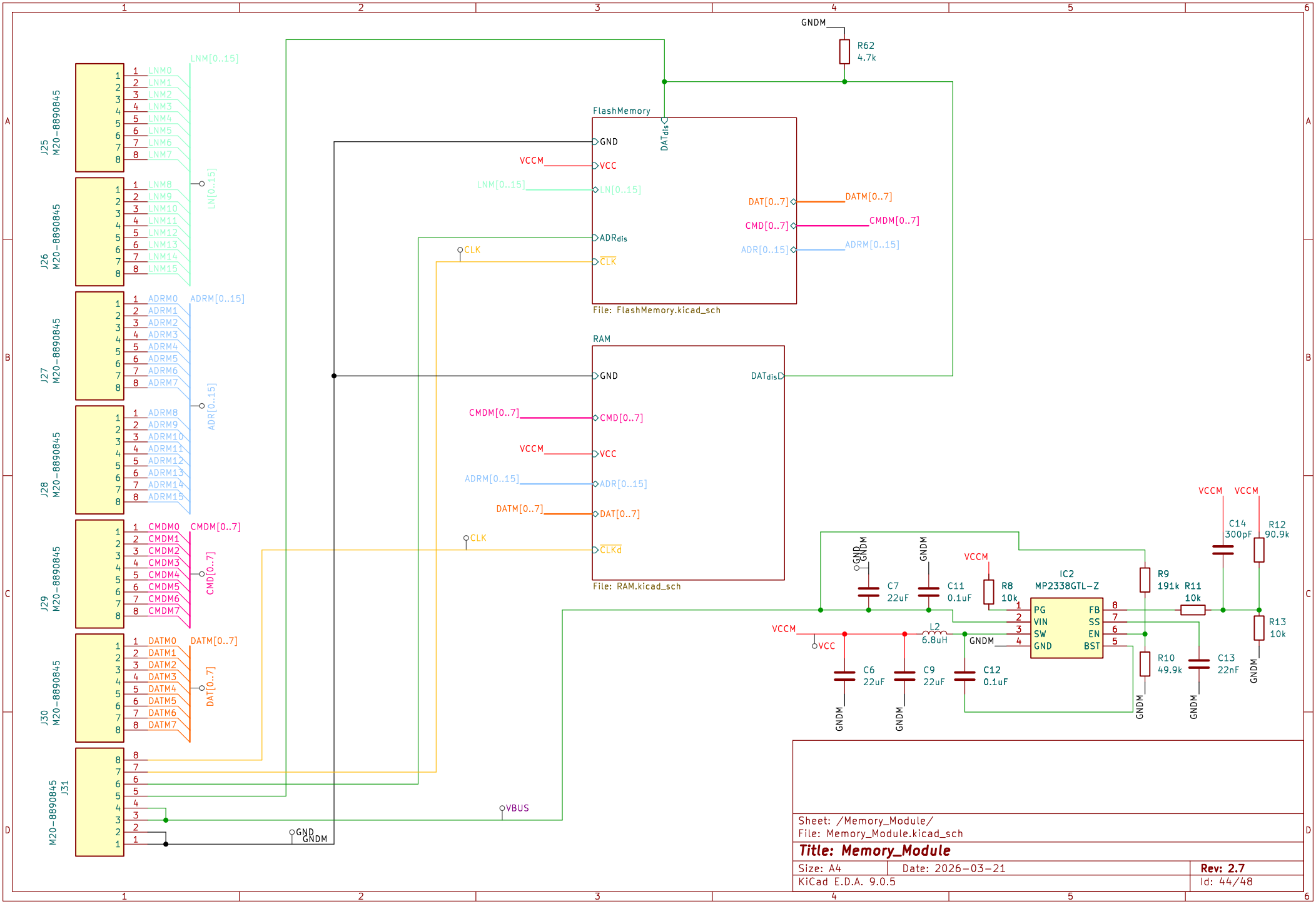

Sheet: /Memory_Module/
File: Memory_Module.kicad_sch

Title: Memory_Module

Size: A4	Date: 2026-03-21	Rev: 2.7
KiCad E.D.A. 9.0.5		Id: 44/48

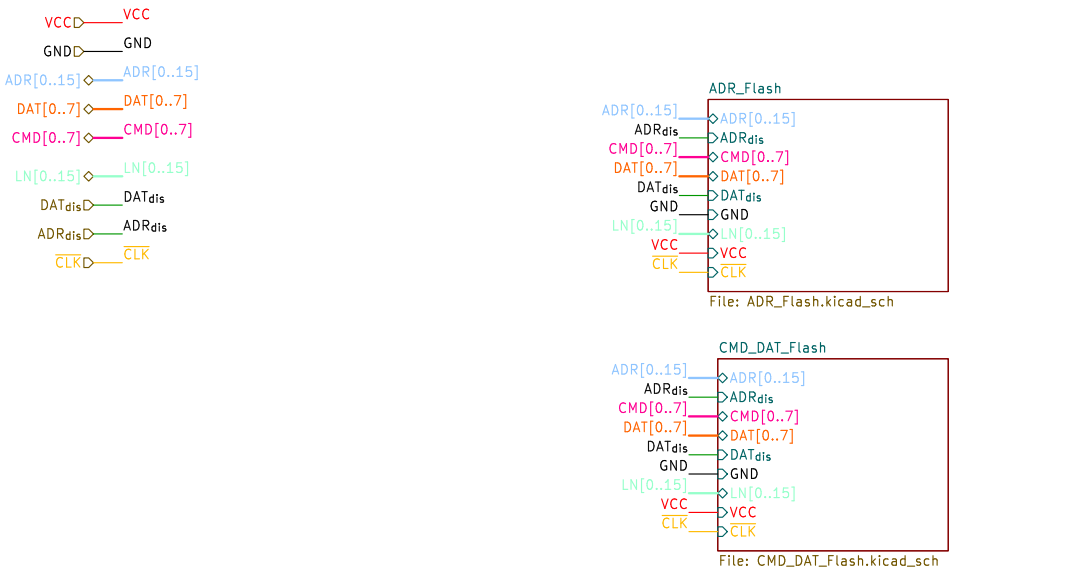

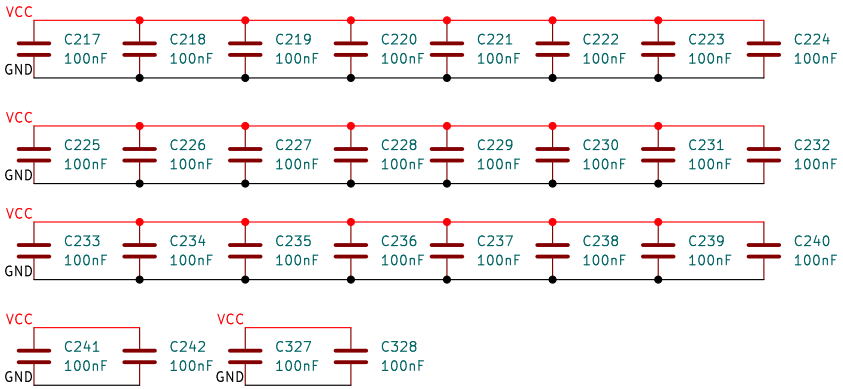

Sheet: /Memory_Module/FlashMemory/
File: FlashMemory.kicad_sch

Title: FlashMemory

Size: A4	Date: 2026-03-21	**Rev: 2.7**
KiCad E.D.A. 9.0.5		Id: 45/48

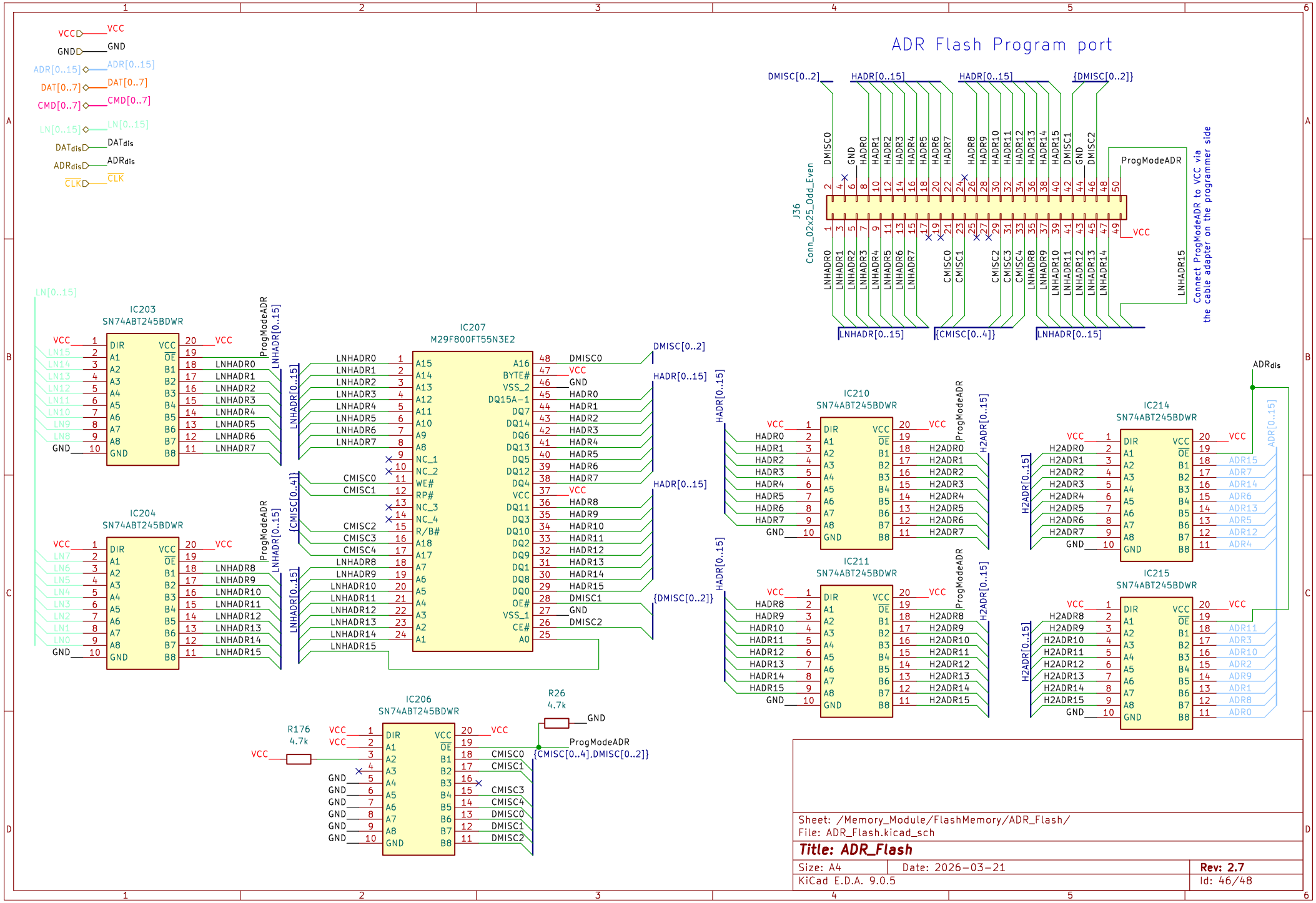
ADR Flash Program port
J36
Conn_02x25_Odd_Even
Connect ProgModeADR to VCC via the cable adapter on the programmer side
IC203
SN74ABT245BDWR
IC204
SN74ABT245BDWR
IC207
M29F800FT55N3E2
IC206
SN74ABT245BDWR
IC210
SN74ABT245BDWR
IC211
SN74ABT245BDWR
IC214
SN74ABT245BDWR
IC215
SN74ABT245BDWR
R176
4.7k
R26
4.7k
ADRdis
ProgModeADR
{CMISC[0..4].DMISC[0..2]}
Sheet: /Memory_Module/FlashMemory/ADR_Flash/
File: ADR_Flash.kicad_sch
Title: ADR_Flash
Size: A4
Date: 2026-03-21
Rev: 2.7
KiCad E.D.A. 9.0.5
Id: 46/48

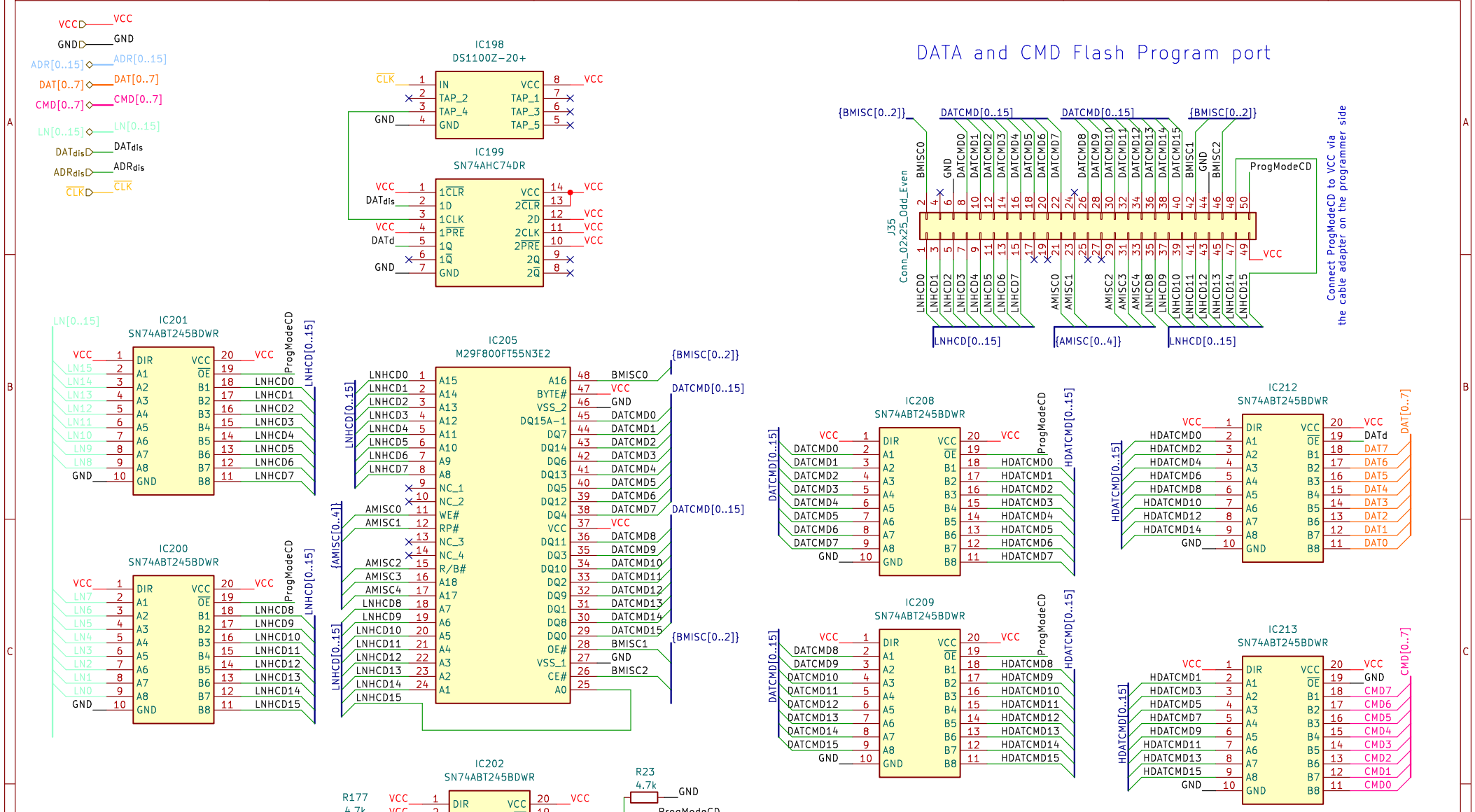

Sheet: /Memory_Module/FlashMemory/CMD_DAT_Flash/
File: CMD_DAT_Flash.kicad_sch

Title: CMD_DAT_Flash

Size: A4	Date: 2026-03-21	Rev: 2.7
KiCad E.D.A. 9.0.5		Id: 47/48

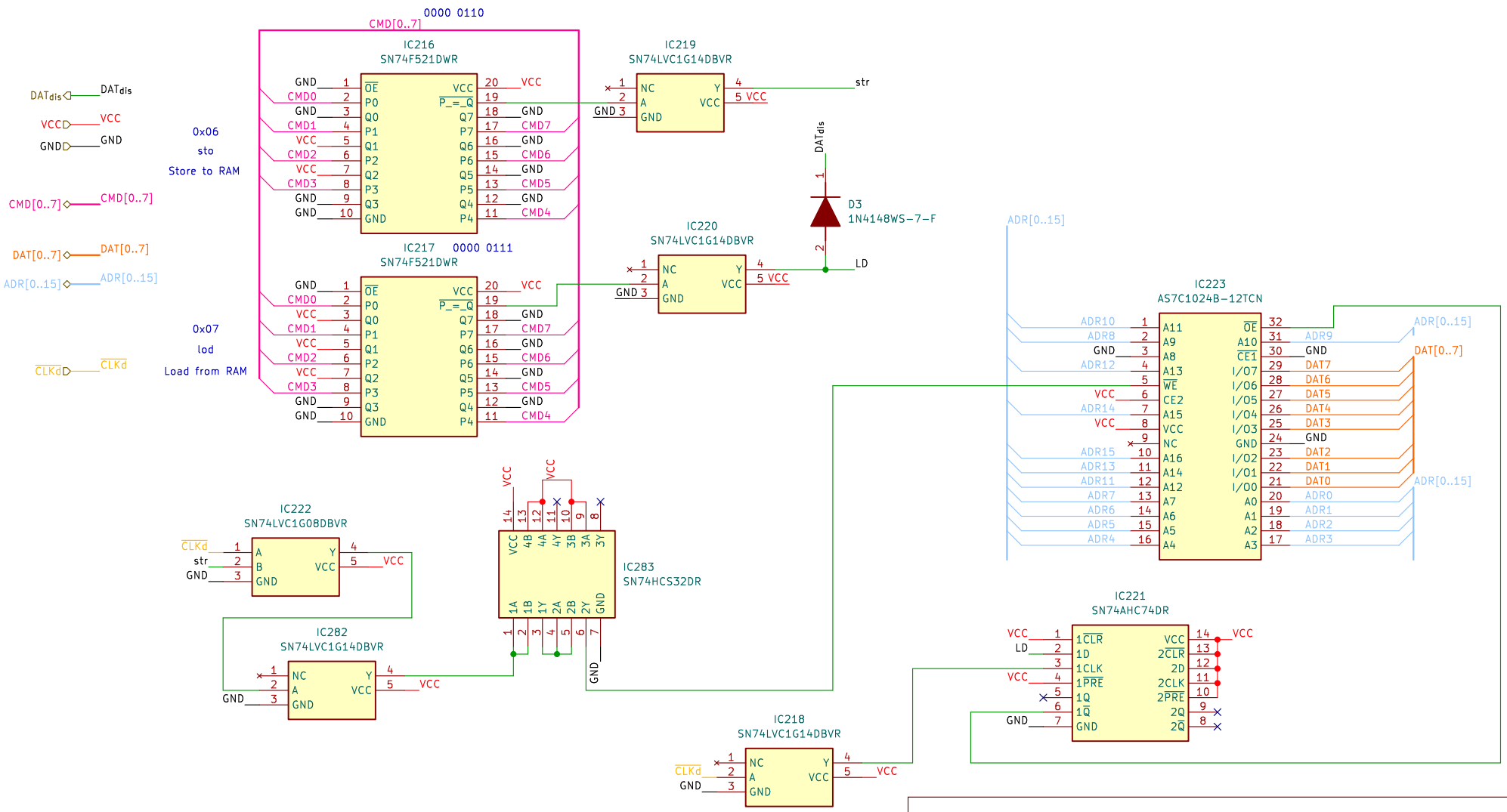

Sheet: /Memory_Module/RAM/
File: RAM.kicad_sch

Title: RAM

Size: A4	Date: 2026-03-21	**Rev: 2.7**
KiCad E.D.A. 9.0.5		Id: 48/48